Docusign Envelope ID: A9A0746E-7614-8538-8284-8D9BDCE64452

AWARD COPY

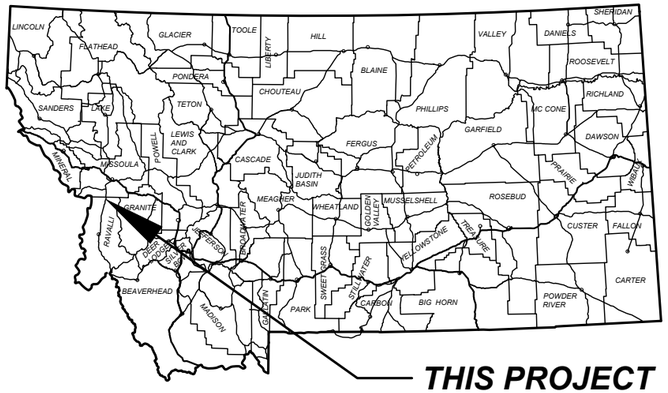

MONTANA DEPARTMENT OF TRANSPORTATION

FEDERAL AID PROJECT STPS 203-1(28)10
PLANT MIX OVERLAY, SEAL & COVER, FOG SEAL
FLORENCE - EAST
RAVALLI COUNTY

LENGTH 2.1 MILES

PROJECT DESIGN DATA

PRESENT	2024	A.A.D.T. =	7,120
LETTING	2026	A.A.D.T. =	7,270
DESIGN	2046	A.A.D.T. =	9,050
		D.H.V. =	990
		TRUCKS =	1.5%
		V. =	60 MPH
		18 KIP ESAL'S =	54 DAILY
		ANNUAL GROWTH RATE =	1.1%

RELATED PROJECTS

HSIP 32164(2)

SURFACING SOURCES - CONTRACTOR FURNISHED

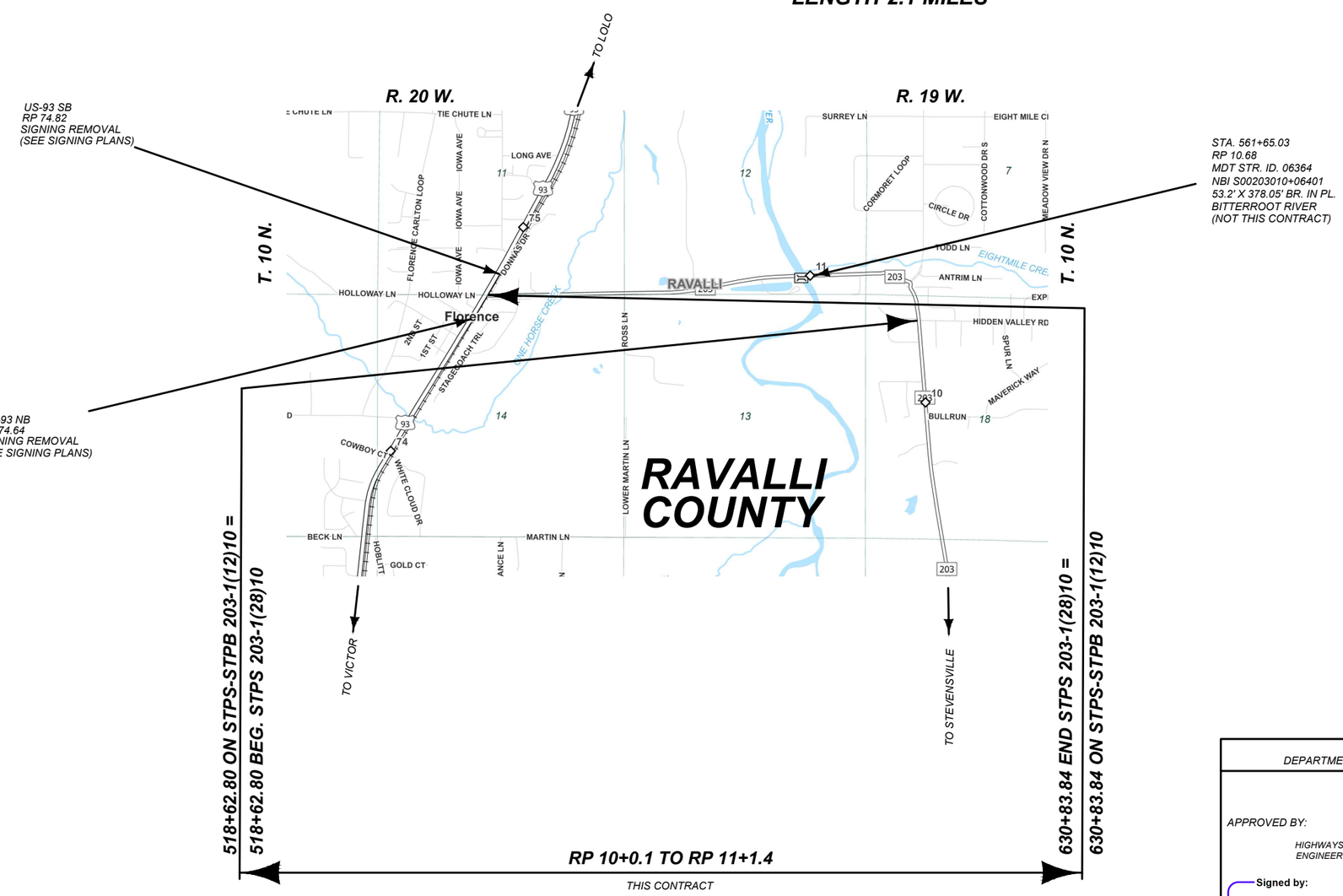

MONTANA
DEPARTMENT OF TRANSPORTATION

APPROVED BY:

HIGHWAYS ENGINEER

Signed by: David Holien
4FA8874BB4E5415...

MONTANA DAVID HOLIEN 20186PE LICENSED PROFESSIONAL ENGINEER

5/1/2026
DATE

SHEET NO. 1

TITLE SHEET

PROJECT NAME	FLORENCE - EAST
COUNTY	RAVALLI
PROJECT ID	STPS 203-1(28)10
UPN	10538000

DESIGNED BY	F. COBARRUBIAS	09/2025	
REVIEWED BY	J. DOLD	12/2025	
CHECKED BY	J. CERECK	12/2025	

10538000RDTTL001.DWG

MONTANA Department of Transportation

ROAD PLANS

3/2/2026 10:16 AM

Docusign Envelope ID: A9A0746E-7614-8538-8284-8D9BDCE64452

AWARD COPY

TABLE OF CONTENTS

ROAD PLANS	SHEET NO.
TITLE SHEET	1
TABLE OF CONTENTS	2
NOTES	2
APPROACHES	2
TYPICAL SECTIONS	3-13
SUMMARIES	14-17
SURFACING	14
ADDITIONAL SURFACING	15
PAVEMENT MARKINGS	16
RUMBLE STRIPS	16
GUARDRAIL	16
CRACK SEALING	16
COLD MILLING	17
CONCRETE BARRIER RAIL	17
CURB	17
SIDEWALK	17
REVEGETATION	17
DETAILS	18-27
SINUSOIDAL CENTERLINE RUMBLE STRIPS	18
SINUSOIDAL SHOULDER RUMBLE STRIPS	19
PMS WIDENING UNDER CBR	20
APPROACHES & PULLOUTS PAVING CONNECTIONS	21
LONGITUDINAL TAPER MILL, MILL/FILL & OVERLAY PROFILE VIEW	22-24
APPLE VALLEY WAY & SHARED-USE PATH (SUP) OVERLAY & CONNECTIONS	25
SIDEWALK	26
CURB REPLACEMENT	27

SIGNING PLANS	
SUMMARY	S1
SPECIFICATIONS	S2-S9
DETAILS	S10-S13
PLANS	S14-S16

ELECTRICAL PLANS	
SUMMARY	E1
PLANS	E1

NOTES

BASIS OF PLAN QUANTITIES

(QUANTITIES FOR ESTIMATING PURPOSES ONLY)

COMP. AGGREGATE WEIGHT	= 3700 LBS. PER CUBIC YARD
COMP. WEIGHT OF PL. MIX BIT. SURF.	= 3855 LBS. PER CUBIC YARD
ASPHALT BINDER - GRADE S - 1/2" AGG.	= 5.8% OF PL.MIX BIT.SURF.
HYDRATED LIME	= 1.4% OF PL.MIX BIT.SURF.
ASPHALT BINDER	= 3.0% OF RECYCLED PL.MIX (50% RAP)
HYDRATED LIME	= 1.4% OF RECYCLED PL.MIX BIT.SURF.
BITUMINOUS MATERIAL	= 8.5 LBS. PER GAL.
EMULSIFIED ASPHALT - TACK (ALL OTHER SURFACES)	= 0.05 GAL. PER SQ.YARD (UNDILUTED)
EMULSIFIED ASPHALT - FOG SEAL (S & C)	= 0.075 GAL. PER SQ.YARD (UNDILUTED)
EMULSIFIED ASPHALT - FOG SEAL (RUMBLE STRIPS)	= 0.10 GAL. PER SQ.YARD (UNDILUTED)
SEAL	= 0.42 GAL. PER SQ.YARD
COVER	= 25 LBS. PER SQ.YARD
CRACK SEALING	= 0.7 LBS. PER LINEAR FOOT
MASTIC CRACK FILLING	= 1.7 LBS. PER LINEAR FOOT
MASTIC CRACK FILLING	= 10.2 LBS. PER SQ. FOOT

AS-BUILTS

STPS-STPB 203-1(12)10
YEAR 2013-2015

WETLANDS

WETLANDS MAY EXIST ADJACENT TO THE ROADWAY AND BEYOND THE PROJECT LIMITS. A WETLAND DELINEATION HAS NOT BEEN COMPLETED FOR THIS PROJECT. IMPACTS TO WETLAND AREAS ARE NOT ANTICIPATED IN ASSOCIATION WITH THE PROPOSED WORK. NO PERMITS HAVE BEEN OBTAINED. ANY ACTION IMPACTING WETLAND AREAS WITHOUT THE APPROPRIATE PERMITTING IS THE RESPONSIBILITY OF THE CONTRACTOR.

UTILITIES

CALL THE UTILITIES UNDERGROUND LOCATION CENTER (811) OR OTHER NOTIFICATION SYSTEM FOR THE MARKING AND LOCATION OF ALL LINES AND SERVICES BEFORE EXCAVATING. ALL CLEARANCES OR DEPTHS PROVIDED FOR UTILITIES ARE FROM EXISTING GROUND LINE.

APPROACHES/TURNOUTS (FOR INFORMATION ONLY)

STATION	TYPE	linear feet PROPOSED SURFACE LENGTH	linear feet PROPOSED SURFACE WIDTH	EXISTING SURFACING	feet PMS THK.	PROPOSED SURFACE	AGGREGATE tons PLANT MIX SURF - 1/2 IN	AGGREGATE cu. yards SHOULDER GRAVEL	BITUMINOUS MATERIAL tons ASPHALT BINDER PG 58H-34	BITUMINOUS MATERIAL gallons EMULSIFIED ASPHALT TACK	sq. yards COLD MILLING 0.00' TO 0.22'	REMARKS
520+86.00	FARM FIELD	3.0	24.0	ASPHALT	0.22	SEE DETAIL	3.0		0.17	2.3	22.8	LT.
572+82.00	FARM FIELD	3.0	24.0	ASPHALT	0.22	SEE DETAIL	3.0		0.17	2.3	22.8	RT.
574+74.00	FARM FIELD	3.0	24.0	ASPHALT	0.22	SEE DETAIL	3.0		0.17	2.3	22.8	RT.
584+14.00	FARM FIELD	3.0	24.0	ASPHALT	0.22	SEE DETAIL	3.0		0.17	2.3	22.8	LT.
600+22.00	FARM FIELD	3.0	24.0	ASPHALT	0.22	SEE DETAIL	3.0		0.17	2.3	22.8	RT.
602+60.00	FARM FIELD	3.0	24.0	ASPHALT	0.22	SEE DETAIL	3.0		0.17	2.3	22.8	RT.
613+46.00	FARM FIELD	3.0	24.0	ASPHALT	0.22	SEE DETAIL	3.0		0.17	2.3	22.8	LT.
SUBTOTAL	**FARM FIELD**	~		~	~	~	**21**	~	**1.2**	**16**	**160**	
520+74.00	PRIVATE	3.0	24.0	ASPHALT	0.22	SEE DETAIL	3.0		0.17	2.3	22.8	RT.
541+66.00	PRIVATE	~	~	ASPHALT	~	~	~	~	~	~	~	* WITH S-203 MAILBOX TURNOUT RT. - NO WORK
541+85.00	PRIVATE	~	~	ASPHALT	~	~	~	~	~	~	~	* WITH S-203 MAILBOX TURNOUT LT. - NO WORK
545+32.00	PRIVATE	3.0	24.0	ASPHALT	0.22	SEE DETAIL	3.0		0.17	2.3	22.8	RT.
553+10.00	PRIVATE	3.0	24.0	ASPHALT	0.22	SEE DETAIL	3.0		0.17	2.3	22.8	LT.
553+10.00	PRIVATE	3.0	288.5	ASPHALT	0.22	SEE DETAIL	12.5		0.73	9.6	96.2	WITH S-203 MAILBOX TURNOUT RT.
555+80.00	PRIVATE	3.0	24.0	ASPHALT	0.22	SEE DETAIL	3.0		0.17	2.3	22.8	RT.
557+17.00	PRIVATE	3.0	24.0	ASPHALT	0.22	SEE DETAIL	3.0		0.17	2.3	22.8	LT.
558+49.00	PRIVATE	~	~	ASPHALT	~	~	~	~	~	~	~	* RT. - NO WORK
579+40.46	PRIVATE	3.0	24.0	ASPHALT	0.22	SEE DETAIL	3.0		0.17	2.3	22.8	RT.
581+82.00	PRIVATE	3.0	24.0	ASPHALT	0.22	SEE DETAIL	3.0		0.17	2.3	22.8	RT.
606+88.00	PRIVATE	3.0	24.0	ASPHALT	0.22	SEE DETAIL	3.0		0.17	2.3	22.8	LT.
606+88.00	PRIVATE	3.0	24.0	ASPHALT	0.22	SEE DETAIL	3.0		0.17	2.3	22.8	RT.
617+94.00	PRIVATE	3.0	24.0	ASPHALT	0.22	SEE DETAIL	3.0		0.17	2.3	22.8	RT.
619+84.00	PRIVATE	3.0	250.3	ASPHALT	0.22	SEE DETAIL	5.8		0.34	8.3	83.5	WITH S-203 MAILBOX TURNOUT RT.
622+24.00	PRIVATE	3.0	250.3	ASPHALT	0.22	SEE DETAIL	5.8		0.34	8.3	83.5	WITH S-203 MAILBOX TURNOUT RT.
622+74.00	PRIVATE	3.0	24.0	ASPHALT	0.22	SEE DETAIL	3.0		0.17	2.3	22.8	RT.
623+14.00	PRIVATE	3.0	24.0	ASPHALT	0.22	SEE DETAIL	3.0		0.17	2.3	22.8	WILDLIFE WAY LT.
623+48.00	PRIVATE	3.0	24.0	ASPHALT	0.22	SEE DETAIL	3.0		0.17	2.3	22.8	EAGLE CT. RT.
627+80.00	PRIVATE	25.0	24.0	ASPHALT	0.22	SEE DETAIL	3.0		0.17	2.3	22.8	RT.
629+41.00	PRIVATE	~	~	ASPHALT	~	~	~	~	~	~	~	* DONNAS DR. RT. - NO WORK
SUBTOTAL	**PRIVATE**	~		~	~	~	**66**	~	**3.8**	**58**	**582**	
524+29.00	PUBLIC	25.0	24.0	ASPHALT	0.22	SEE DETAIL	14.5	0.9	0.84	3.2	31.6	APPLE VALLEY WAY LT.
528+98.00	PUBLIC	25.0	24.0	ASPHALT	0.22	SEE DETAIL	14.5	0.9	0.84	3.2	31.6	HIDDEN VALLEY RD RT.
529+45.00	PUBLIC	25.0	24.0	ASPHALT	0.22	SEE DETAIL	14.5	0.9	0.84	3.2	31.6	APPLE VALLEY WAY LT.
537+55.00	PUBLIC	~	~	PCCP	~	~	~	~	~	~	~	EIGHT MILE CREEK RD RT. - NO WORK - IN PCCP SECTION
548+50.00	PUBLIC	25.0	24.0	ASPHALT	0.22	SEE DETAIL	14.5	0.9	0.84	3.2	31.6	NEW FARM WAY LT.
570+07.00	PUBLIC	25.0	24.0	ASPHALT	0.22	SEE DETAIL	14.5	0.9	0.84	3.2	31.6	FWP FAS SITE LT.
584+98.00	PUBLIC	25.0	24.0	ASPHALT	0.22	SEE DETAIL	14.5	0.9	0.84	3.2	31.6	KLEMENTS LN. RT.
600+32.00	PUBLIC	25.0	24.0	ASPHALT	0.22	SEE DETAIL	14.5	0.9	0.84	3.2	31.6	ROSS LN. LT.
SUBTOTAL	**PUBLIC**	~		~	~	~	**102**	**6**	**5.9**	**22**	**221**	

FOR INFORMATION ONLY - SEE ADDITIONAL SURFACING & COLD MILLING FRAMES FOR QUANTITY TOTALS. SEE DETAIL
* IN FULL DEPTH ASPHALT MILL AND OVERLAY ZONES. TAPER COLD MILLING AND ASPHALT OVERLAY TRANSITIONS ARE NOT NEEDED. NO WORK IS INCLUDED ACROSS APPROACHES.

SHEET NO.
2

TABLE OF CONTENTS, NOTES & APPROACHES

PROJECT NAME: FLORENCE - EAST
COUNTY: RAVALLI
PROJECT ID: STPS 203-1(28)10
UPN: 10538000

DESIGNED BY: F. COBARRUBIAS 09/2025
REVIEWED BY: J. DOLD 12/2025
CHECKED BY: J. CERECK 12/2025

MONTANA Department of Transportation
ROAD PLANS

3/2/2026 10:16 AM
10538000RDTTL001.DWG

Docusign Envelope ID: A9A0746E-7614-8538-8284-8D9BDCE64452

TYPICAL SECTION NO. 1

MAINLINE

518+62.80	TO 527+05.00	
527+05.00	TO 528+25.00	TRANS. TYP. NO. 1 TO TYP. NO.2
#550+70.00	TO #557+76.00	THEN TYP. NO. 13
##565+54.05	TO ##616+62.00	
##616+62.00	TO ##617+48.00	TRANS. TYP. NO. 1 TO TYP. NO.15

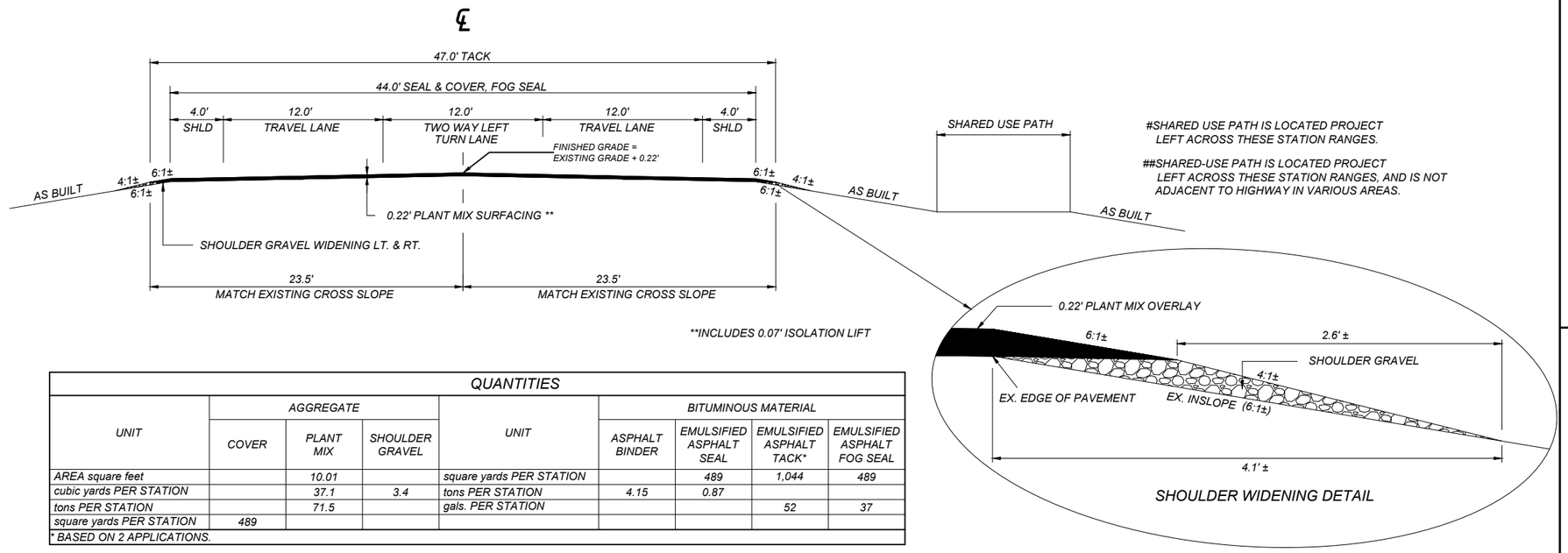

#SHARED USE PATH IS LOCATED PROJECT LEFT ACROSS THESE STATION RANGES.

##SHARED-USE PATH IS LOCATED PROJECT LEFT ACROSS THESE STATION RANGES, AND IS NOT ADJACENT TO HIGHWAY IN VARIOUS AREAS.

**INCLUDES 0.07' ISOLATION LIFT

QUANTITIES								
UNIT	AGGREGATE			UNIT	BITUMINOUS MATERIAL			
	COVER	PLANT MIX	SHOULDER GRAVEL		ASPHALT BINDER	EMULSIFIED ASPHALT SEAL	EMULSIFIED ASPHALT TACK*	EMULSIFIED ASPHALT FOG SEAL
AREA square feet		10.01		square yards PER STATION		489	1,044	489
cubic yards PER STATION		37.1	3.4	tons PER STATION	4.15	0.87		
tons PER STATION		71.5		gals. PER STATION			52	37
square yards PER STATION	489							

* BASED ON 2 APPLICATIONS.

TYPICAL SECTION NO. 2

MAINLINE

528+25.00	TO 529+06.59	
529+06.59	TO 529+80.59	TRANS. TYP. NO. 2 TO TYP. NO. 3
530+76.59	TO 531+00.00	
531+00.00	TO 532+80.00	TRANS. TYP. NO. 2 TO TYP. NO. 4

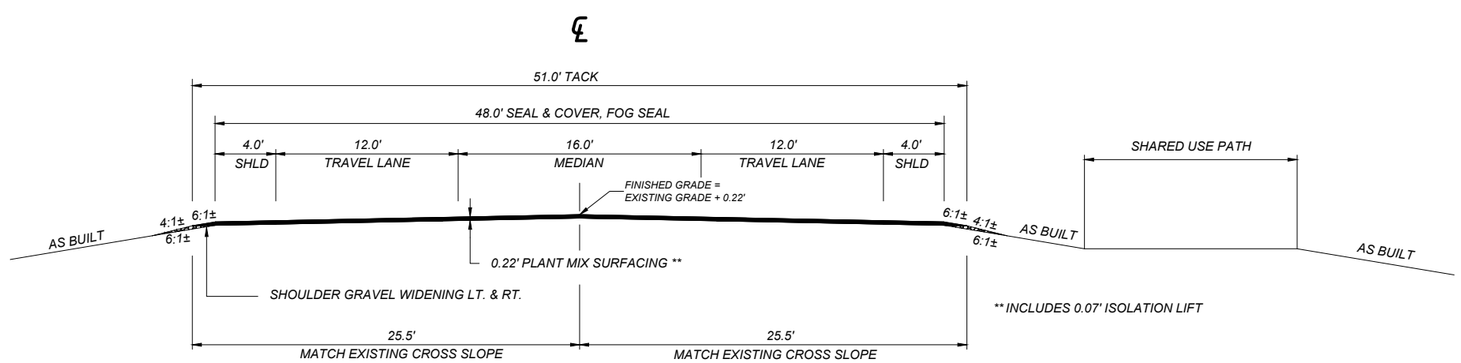

** INCLUDES 0.07' ISOLATION LIFT

NOTE: SEE TYP. NO. 1 FOR THE SHOULDER GRAVEL WIDENING DETAIL WITH 6:1 INSLOPE.

QUANTITIES								
UNIT	AGGREGATE			UNIT	BITUMINOUS MATERIAL			
	COVER	PLANT MIX	SHOULDER GRAVEL		ASPHALT BINDER	EMULSIFIED ASPHALT SEAL	EMULSIFIED ASPHALT TACK*	EMULSIFIED ASPHALT FOG SEAL
AREA square feet		10.89		square yards PER STATION		533	1,134	533
cubic yards PER STATION		40.3	3.4	tons PER STATION	4.51	0.95		
tons PER STATION		77.7		gals. PER STATION			57	40
square yards PER STATION	533							

* BASED ON 2 APPLICATIONS

SHEET NO. 3

TYPICAL SECTION

PROJECT NAME: FLORENCE - EAST
COUNTY: RAVALLI
PROJECT ID: STPS 203-1(28)10
UPN: 10538000

DESIGNED BY: F. COBARRUBIAS 07/2025
REVIEWED BY: J. DOLD 12/2025
CHECKED BY: J. CERECK 12/2025

MONTANA Department of Transportation
ROAD PLANS

10538000RDTYP001.DWG
3/2/2026 10:16 AM

Docusign Envelope ID: A9A0746E-7614-8538-8284-8D9BDCE64452

AWARD COPY

TYPICAL SECTION NO. 3

MAINLINE

529+80.59 ONLY
529+80.59 TO 530+76.59 TRANS. TYP. NO. 3 TO TYP. NO. 2

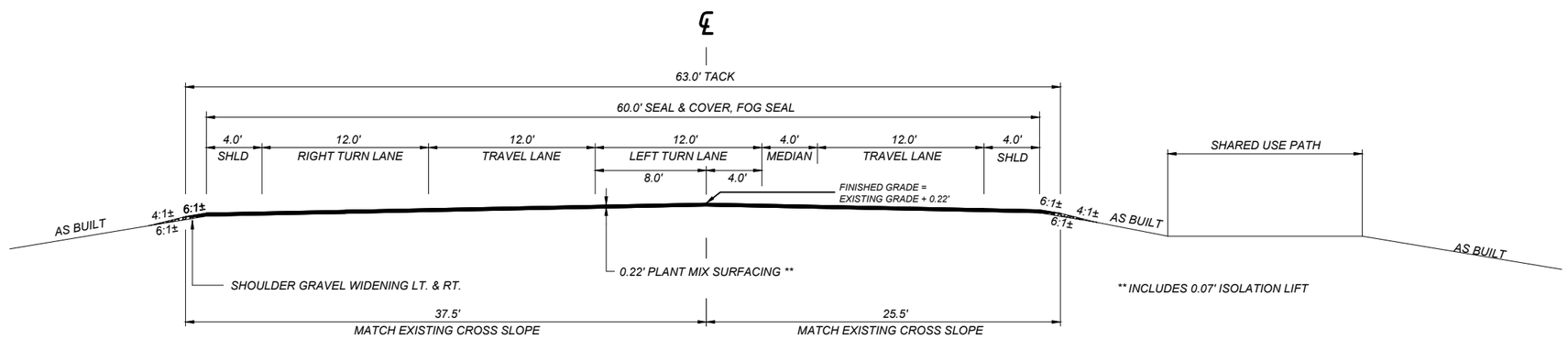

QUANTITIES								
UNIT	AGGREGATE			UNIT	BITUMINOUS MATERIAL			
	COVER	PLANT MIX	SHOULDER GRAVEL		ASPHALT BINDER	EMULSIFIED ASPHALT SEAL	EMULSIFIED ASPHALT TACK*	EMULSIFIED ASPHALT FOG SEAL
AREA square feet		13.53		square yards PER STATION		667	1,400	667
cubic yards PER STATION		50.1	3.4	tons PER STATION	5.60	1.19		
tons PER STATION		96.6		gals. PER STATION			70	50
square yards PER STATION	667							
* BASED ON 2 APPLICATIONS								

NOTE: SEE TYP. NO. 1 FOR THE SHOULDER GRAVEL WIDENING DETAIL WITH 6:1 INSLOPE.

TYPICAL SECTION NO. 4

MAINLINE

532+80.00 ONLY
532+80.00 TO 534+00.00 TRANS. TYP. NO. 4 TO TYP. NO. 5

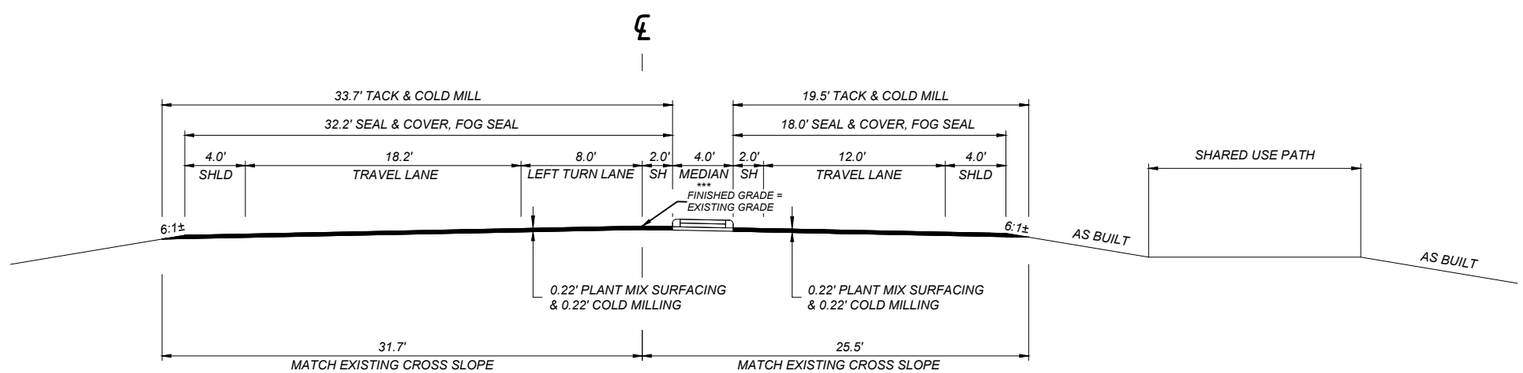

*** NO WORK WILL OCCUR UNDER RAISED MEDIANS. DO NOT DISTURB RAISED MEDIANS.

QUANTITIES							
UNIT	AGGREGATE		UNIT	BITUMINOUS MATERIAL			
	COVER	PLANT MIX		ASPHALT BINDER	EMULSIFIED ASPHALT SEAL	EMULSIFIED ASPHALT TACK*	EMULSIFIED ASPHALT FOG SEAL
AREA square feet		11.37	square yards PER STATION		558	1,182	558
cubic yards PER STATION		42.1	tons PER STATION	4.70	1.00		
tons PER STATION		81.1	gals. PER STATION			59	42
square yards PER STATION	558						
* BASED ON 2 APPLICATIONS							

SHEET NO.
4

TYPICAL SECTION

PROJECT NAME: FLORENCE - EAST
COUNTY: RAVALLI
PROJECT ID: STPS 203-1(28)10
UPN: 10538000

DESIGNED BY: F. COBARRUBIAS 07/2025
REVIEWED BY: J. DOLD 12/2025
CHECKED BY: J. CERECK 12/2025

MONTANA Department of Transportation
ROAD PLANS

10538000RDTYP001.DWG
3/2/2026 10:16 AM

Docusign Envelope ID: A9A0746E-7614-8538-8284-8D9BDCE64452

534+00.00 ONLY
534+00.00 TO 534+50.00 TRANS. TYP. NO. 5 TO TYP. NO. 6

TYPICAL SECTION NO. 5

MAINLINE

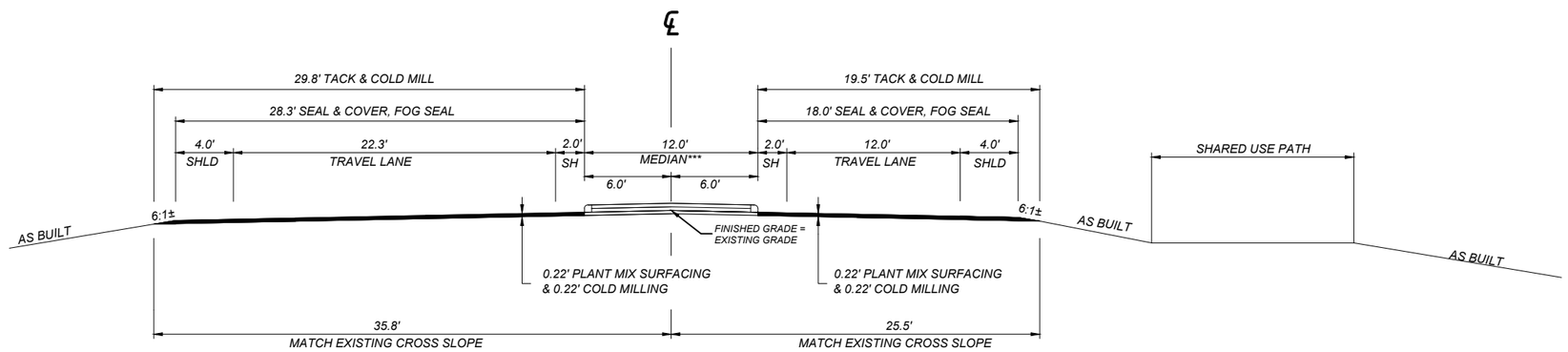

*** NO WORK WILL OCCUR UNDER RAISED MEDIANS. DO NOT DISTURB RAISED MEDIANS.

QUANTITIES

UNIT	AGGREGATE		UNIT	BITUMINOUS MATERIAL			
	COVER	PLANT MIX		ASPHALT BINDER	EMULSIFIED ASPHALT SEAL	EMULSIFIED ASPHALT TACK*	EMULSIFIED ASPHALT FOG SEAL
AREA square feet		10.52	square yards PER STATION		514	1,096	514
cubic yards PER STATION		39.0	tons PER STATION	4.36	0.92		
tons PER STATION		75.2	gals. PER STATION			55	39
square yards PER STATION	514						

* BASED ON 2 APPLICATIONS

534+50.00 ONLY
534+50.00 TO 535+75.27 TRANS. TYP. NO. 6 TO TYP. NO. 7

TYPICAL SECTION NO. 6

MAINLINE

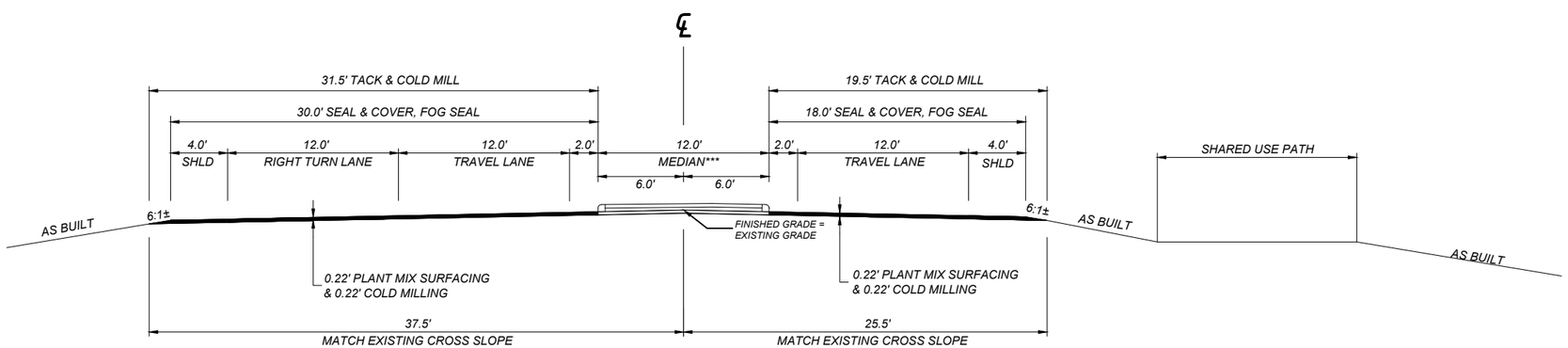

*** NO WORK WILL OCCUR UNDER RAISED MEDIANS. DO NOT DISTURB RAISED MEDIANS.

QUANTITIES

UNIT	AGGREGATE		UNIT	BITUMINOUS MATERIAL			
	COVER	PLANT MIX		ASPHALT BINDER	EMULSIFIED ASPHALT SEAL	EMULSIFIED ASPHALT TACK*	EMULSIFIED ASPHALT FOG SEAL
AREA square feet		10.89	square yards PER STATION		533	1,134	533
cubic yards PER STATION		40.3	tons PER STATION	4.51	0.95		
tons PER STATION		77.7	gals. PER STATION			57	40
square yards PER STATION	533						

* BASED ON 2 APPLICATIONS

SHEET NO.
5

TYPICAL SECTION

PROJECT NAME: FLORENCE - EAST
COUNTY: RAVALLI
PROJECT ID: STPS 203-1(28)10
UPN: 10538000

DESIGNED BY: F. COBARRUBIAS 07/2025
REVIEWED BY: J. DOLD 12/2025
CHECKED BY: J. CERECK 12/2025

MONTANA Department of Transportation
ROAD PLANS

3/2/2026 10:16 AM
10538000RDTYP001.DWG

Docusign Envelope ID: A9A0746E-7614-8538-8284-8D9BDCE64452

AWARD COPY

535+75.27 ONLY
535+75.27 TO 539+49.00 (PCCP ROUNDABOUT) THEN TYP. NO. 8

TYPICAL SECTION NO. 7

MAINLINE

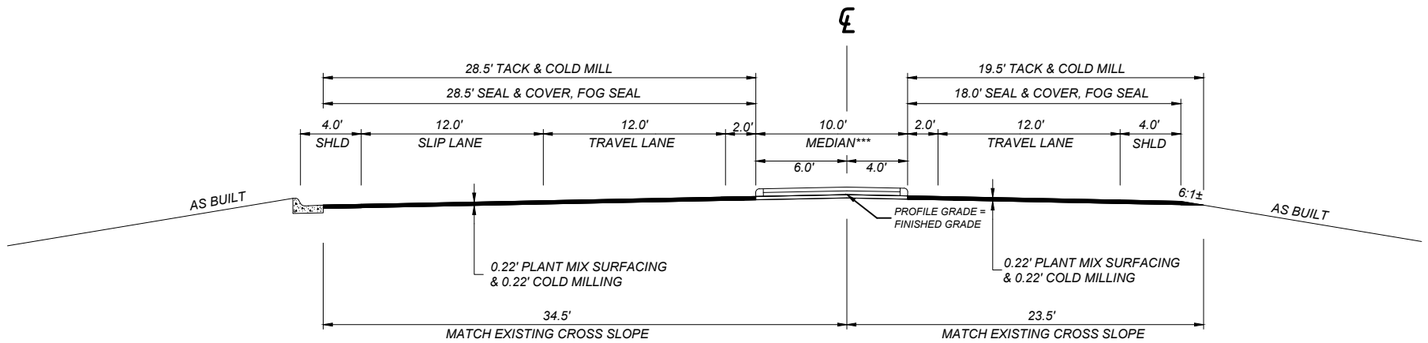

***NO WORK WILL OCCUR UNDER RAISED MEDIANS. DO NOT DISTURB RAISED MEDIANS.

QUANTITIES							
UNIT	AGGREGATE		UNIT	BITUMINOUS MATERIAL			
	COVER	PLANT MIX		ASPHALT BINDER	EMULSIFIED ASPHALT SEAL	EMULSIFIED ASPHALT TACK*	EMULSIFIED ASPHALT FOG SEAL
AREA square feet		10.40	square yards PER STATION		517	1,066	517
cubic yards PER STATION		38.5	tons PER STATION	4.30	0.92		
tons PER STATION		74.2	gals. PER STATION			53	39
square yards PER STATION	517						
* BASED ON 2 APPLICATIONS							

539+49.00 ONLY
539+49.00 TO 541+02.75 TRANS. TYP. NO. 8 TO TYP. NO. 9

TYPICAL SECTION NO. 8

MAINLINE

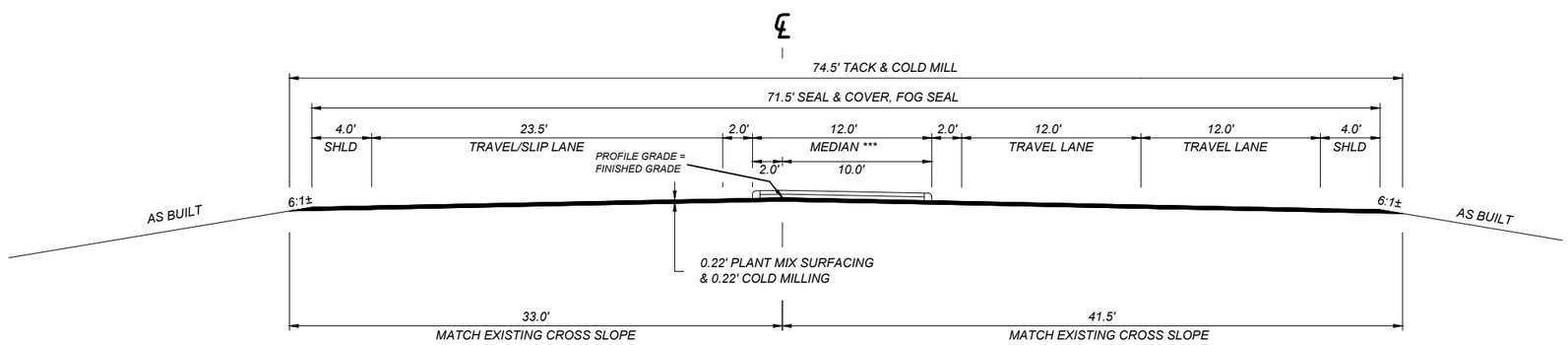

***ASPHALT OVERLAY, SEAL AND COVER, AND FOG SEAL UNDER THE RAISED MEDIAN IS INCLUDED IN THE TYPICAL SECTION QUANTITIES, AND THEN DEDUCTED FROM THE QUANTITIES IN THE ADDITIONAL SURFACING FRAME BETWEEN 539+49.00 AND 541+56.70
NO WORK WILL OCCUR UNDER RAISED MEDIANS. DO NOT DISTURB RAISED MEDIANS.

QUANTITIES							
UNIT	AGGREGATE		UNIT	BITUMINOUS MATERIAL			
	COVER	PLANT MIX		ASPHALT BINDER	EMULSIFIED ASPHALT SEAL	EMULSIFIED ASPHALT TACK*	EMULSIFIED ASPHALT FOG SEAL
AREA square feet		16.06	square yards PER STATION		794	1,656	794
cubic yards PER STATION		59.5	tons PER STATION	6.65	1.42		
tons PER STATION		114.7	gals. PER STATION			83	60
square yards PER STATION	794						
* BASED ON 2 APPLICATIONS							

SHEET NO. 6

TYPICAL SECTION

PROJECT NAME: FLORENCE - EAST
COUNTY: RAVALLI
PROJECT ID: STPS 203-1(28)10
UPN: 10538000

DESIGNED BY: F. COBARRUBIAS 07/2025
REVIEWED BY: J. DOLD 12/2025
CHECKED BY: J. CERECK 12/2025

MONTANA Department of Transportation
ROAD PLANS

10538000RDTYP001.DWG
3/2/2026 10:16 AM

Docusign Envelope ID: A9A0746E-7614-8538-8284-8D9BDCE64452

AWARD COPY

541+02.75 ONLY
541+02.75 TO 541+56.70 TRANS. TYP. NO. 9 TO TYP. NO. 10

TYPICAL SECTION NO. 9

MAINLINE

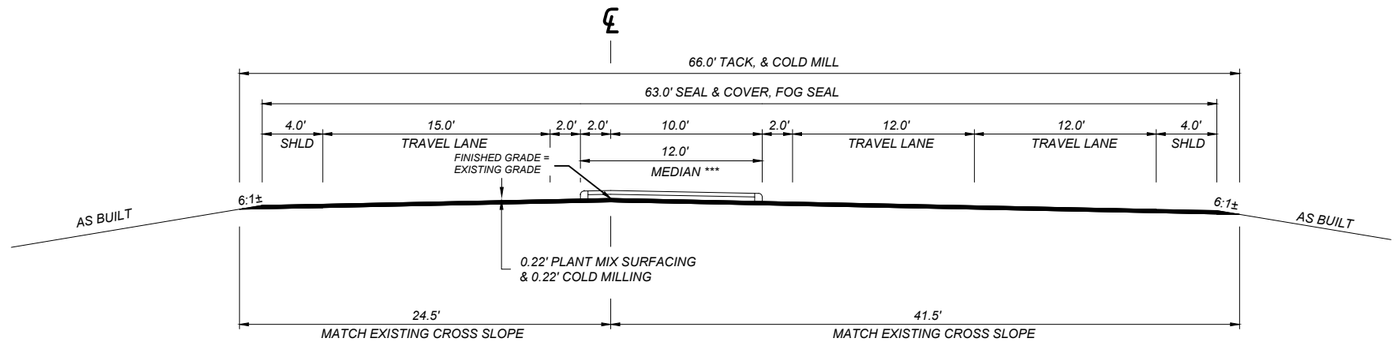

***ASPHALT OVERLAY, SEAL AND COVER, AND FOG SEAL UNDER THE RAISED MEDIAN IS INCLUDED IN THE TYPICAL SECTION QUANTITIES, AND THEN DEDUCTED FROM THE QUANTITIES IN THE ADDITIONAL SURFACING FRAME BETWEEN 539+49.00 AND 541+56.70
NO WORK WILL OCCUR UNDER RAISED MEDIANS.
DO NOT DISTURB RAISED MEDIANS.

QUANTITIES

UNIT	AGGREGATE		UNIT	BITUMINOUS MATERIAL			
	COVER	PLANT MIX		ASPHALT BINDER	EMULSIFIED ASPHALT SEAL	EMULSIFIED ASPHALT TACK*	EMULSIFIED ASPHALT FOG SEAL
AREA square feet		14.19	square yards PER STATION		700	1,466	700
cubic yards PER STATION		52.6	tons PER STATION	5.88	1.25		
tons PER STATION		101.4	gals. PER STATION			73	53
square yards PER STATION	700						

* BASED ON 2 APPLICATIONS

541+56.70 ONLY
541+56.70 TO 543+42.75 TRANS. TYP. NO. 10 TO TYP. NO. 11

TYPICAL SECTION NO. 10

MAINLINE

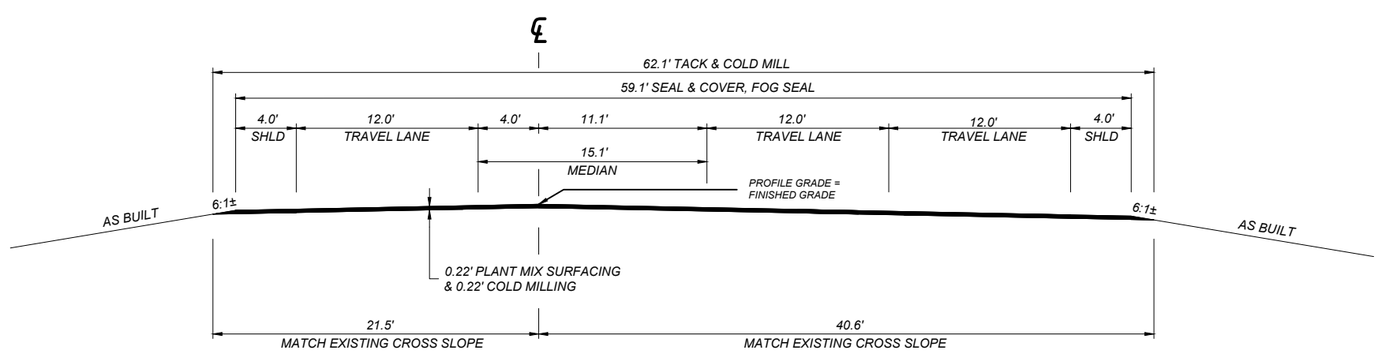

QUANTITIES

UNIT	AGGREGATE		UNIT	BITUMINOUS MATERIAL			
	COVER	PLANT MIX		ASPHALT BINDER	EMULSIFIED ASPHALT SEAL	EMULSIFIED ASPHALT TACK*	EMULSIFIED ASPHALT FOG SEAL
AREA square feet		13.33	square yards PER STATION		657	1,380	657
cubic yards PER STATION		49.4	tons PER STATION	5.52	1.17		
tons PER STATION		95.2	gals. PER STATION			69	49
square yards PER STATION	657						

* BASED ON 2 APPLICATIONS

SHEET NO.
7

TYPICAL SECTION

PROJECT NAME: FLORENCE - EAST
COUNTY: RAVALLI
PROJECT ID: STPS 203-1(28)10
UPN: 10538000

DESIGNED BY: F. COBARRUBIAS 07/2025
REVIEWED BY: J. DOLD 12/2025
CHECKED BY: J. CERECK 12/2025

MONTANA Department of Transportation
ROAD PLANS

5/22/2025 1:38 PM
10538000RDTYP001.DWG

Docusign Envelope ID: A9A0746E-7614-8538-8284-8D9BDCE64452

AWARD COPY

543+42.75 ONLY
543+42.75 TO 544+62.75 TRANS. TYP. NO. 11 TO TYP. NO. 12

TYPICAL SECTION NO. 11

MAINLINE

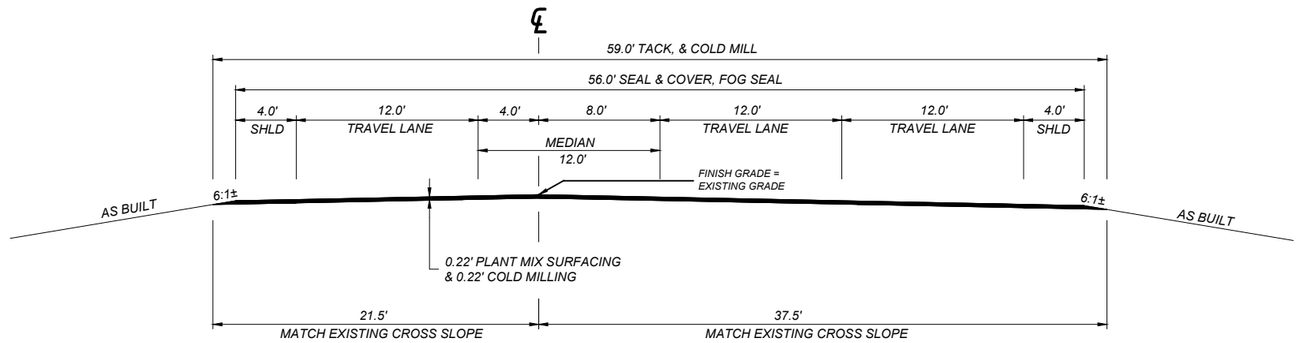

QUANTITIES							
UNIT	AGGREGATE		UNIT	BITUMINOUS MATERIAL			
	COVER	PLANT MIX		ASPHALT BINDER	EMULSIFIED ASPHALT SEAL	EMULSIFIED ASPHALT TACK*	EMULSIFIED ASPHALT FOG SEAL
AREA square feet		12.65	square yards PER STATION		622	1,312	622
cubic yards PER STATION		46.9	tons PER STATION	5.24	1.11		
tons PER STATION		90.4	gals. PER STATION			66	47
square yards PER STATION	622						
* BASED ON 2 APPLICATIONS							

544+62.75 ONLY
544+62.75 TO 550+70.00 TRANS. TYP. NO. 12 TO TYP. NO. 1

TYPICAL SECTION NO. 12

MAINLINE

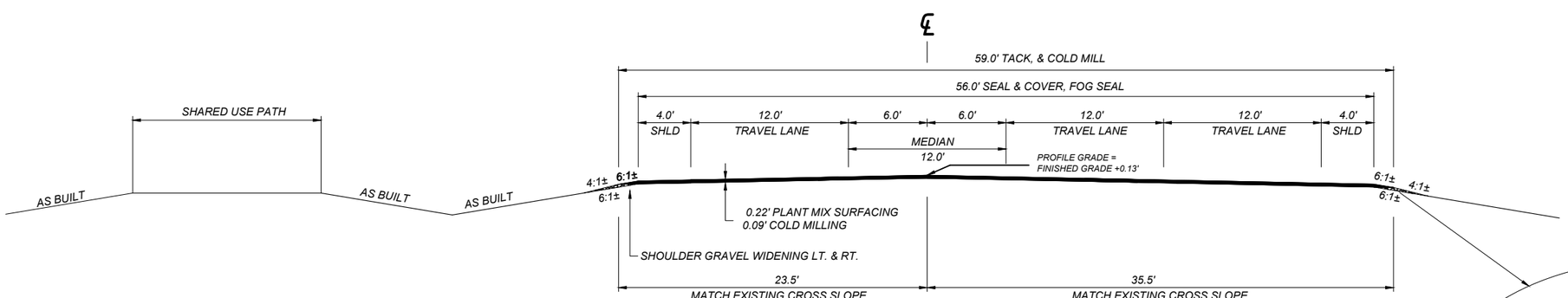

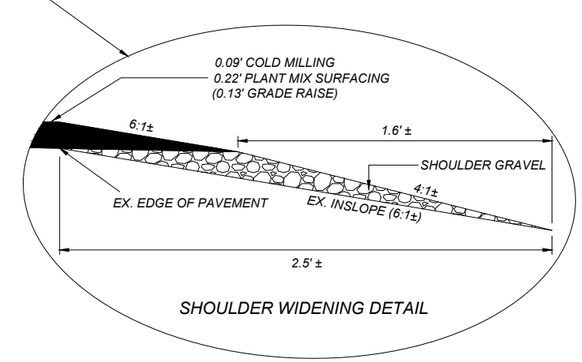

SHOULDER WIDENING DETAIL

QUANTITIES								
UNIT	AGGREGATE			UNIT	BITUMINOUS MATERIAL			
	COVER	PLANT MIX	SHOULDER GRAVEL		ASPHALT BINDER	EMULSIFIED ASPHALT SEAL	EMULSIFIED ASPHALT TACK*	EMULSIFIED ASPHALT FOG SEAL
AREA square feet		12.65		square yards PER STATION		622	1,312	622
cubic yards PER STATION		46.9	2.5	tons PER STATION	5.24	1.11		
tons PER STATION		90.4		gals. PER STATION			66	47
square yards PER STATION	622							
* BASED ON 2 APPLICATIONS								

SHEET NO.
8

TYPICAL SECTION

PROJECT NAME FLORENCE - EAST
COUNTY RAVALLI
PROJECT ID STPS 203-1(28)10
UPN 10538000

DESIGNED BY F. COBARRUBIAS 07/2025
REVIEWED BY J. DOLD 12/2025
CHECKED BY J. CERECK 12/2025

MONTANA Department of Transportation
ROAD PLANS

10538000RDTYP001.DWG
3/2/2026 10:16 AM

Docusign Envelope ID: A9A0746E-7614-8538-8284-8D9BDCE64452

AWARD COPY

TYPICAL SECTION NO. 13

MAINLINE

557+76.00 TO 558+27.00
558+27.00 TO 559+47.00 TRANS. TYP. NO. 13 TO TYP. NO. 14
564+82.00 TO 565+54.05 THEN TYP. NO. 1

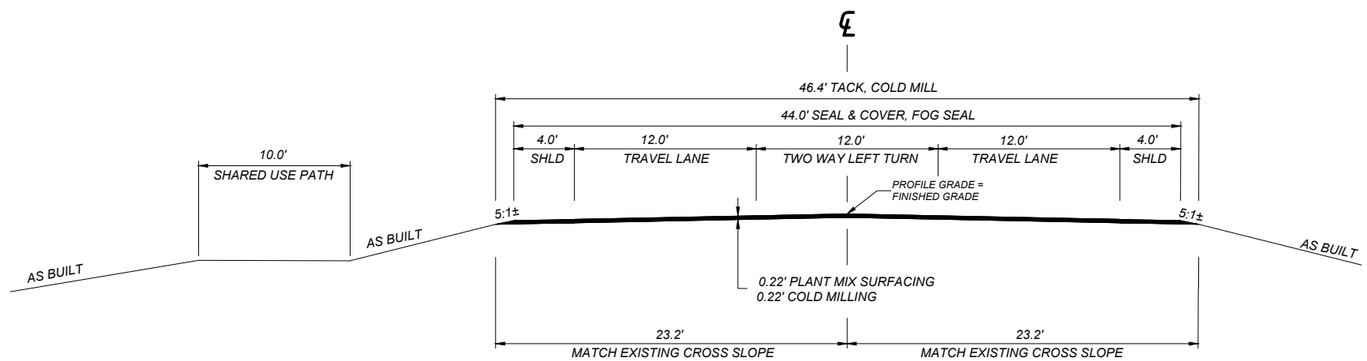

QUANTITIES							
UNIT	AGGREGATE		UNIT	BITUMINOUS MATERIAL			
	COVER	PLANT MIX		ASPHALT BINDER	EMULSIFIED ASPHALT SEAL	EMULSIFIED ASPHALT TACK*	EMULSIFIED ASPHALT FOG SEAL
AREA square feet		9.94	square yards PER STATION		489	1,032	489
cubic yards PER STATION		36.8	tons PER STATION	4.11	0.87		
tons PER STATION		70.9	gals. PER STATION			52	37
square yards PER STATION	489						
* BASED ON 2 APPLICATIONS							

TYPICAL SECTION NO. 14

MAINLINE

559+47.00 TO 559+76.00 BE
563+54.05 BE TO 563+62.00
563+62.00 TO 564+82.00 TRANS. TYP. NO. 14 TO TYP. NO. 13

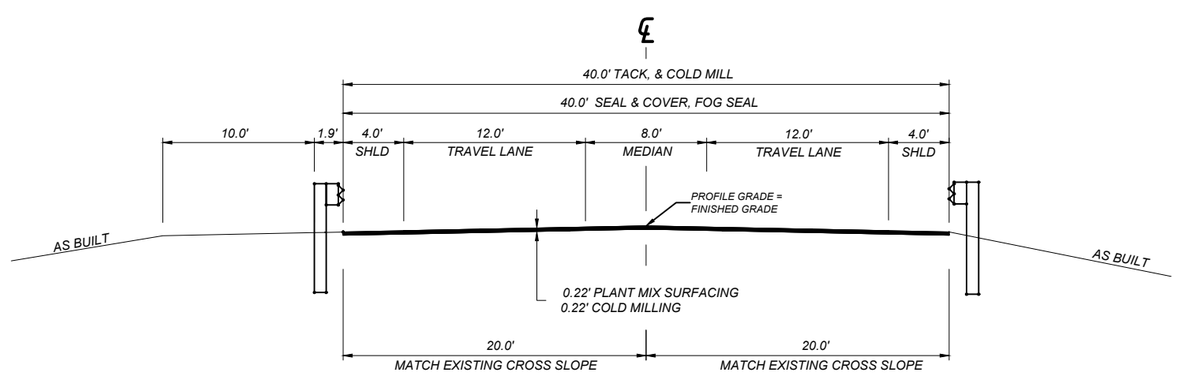

QUANTITIES							
UNIT	AGGREGATE		UNIT	BITUMINOUS MATERIAL			
	COVER	PLANT MIX		ASPHALT BINDER	EMULSIFIED ASPHALT SEAL	EMULSIFIED ASPHALT TACK*	EMULSIFIED ASPHALT FOG SEAL
AREA square feet		8.80	square yards PER STATION		444	888	444
cubic yards PER STATION		32.6	tons PER STATION	3.64	0.79		
tons PER STATION		62.8	gals. PER STATION			44	33
square yards PER STATION	444						
* BASED ON 2 APPLICATIONS							

SHEET NO.
9

TYPICAL SECTION

PROJECT NAME: FLORENCE - EAST
COUNTY: RAVALLI
PROJECT ID: STPS 203-1(28)10
UPN: 10538000

DESIGNED BY: F. COBARRUBIAS 07/2025
REVIEWED BY: J. DOLD 12/2025
CHECKED BY: J. CERECK 12/2025

MONTANA Department of Transportation
ROAD PLANS

10538000RDTYP001.DWG
9/24/2025 3:28 PM

Docusign Envelope ID: A9A0746E-7614-8538-8284-8D9BDCE64452

617+48.00 TO 622+78.00
622+78.00 TO 623+50.00 TRANS. TYP. NO. 15 TO TYP. NO. 16

TYPICAL SECTION NO. 15

MAINLINE

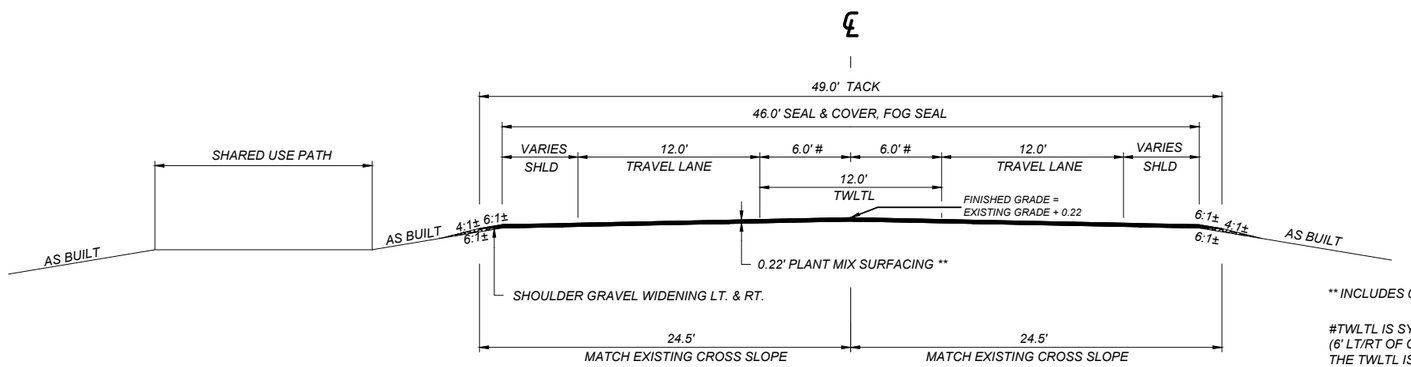

** INCLUDES 0.07' ISOLATION LIFT

#TWLTL IS SYMMETRIC ABOUT CL (6' LT/RT OF CL) FROM 617+48 TO 620+28, AND THEN THE TWLTL IS OFFSET 3' LT. & 9' RT. OF CL FROM 621+78 TO 622+78.

NOTE: SEE TYP. NO. 1 FOR THE SHOULDER GRAVEL WIDENING DETAIL WITH 6:1 INSLOPE.

QUANTITIES

UNIT	AGGREGATE			UNIT	BITUMINOUS MATERIAL			
	COVER	PLANT MIX	SHOULDER GRAVEL		ASPHALT BINDER	EMULSIFIED ASPHALT SEAL	EMULSIFIED ASPHALT TACK*	EMULSIFIED ASPHALT FOG SEAL
AREA square feet		10.45		square yards PER STATION		511	1,088	511
cubic yards PER STATION		38.7	3.4	tons PER STATION	4.33	0.91		
tons PER STATION		74.6		gals. PER STATION			54	38
square yards PER STATION	511							

* BASED ON 2 APPLICATIONS

623+50.00 TO 625+71.07
625+71.07 TO 626+81.07 TRANS. TYP. NO.16 TO TYP. NO. 17

TYPICAL SECTION NO. 16

MAINLINE

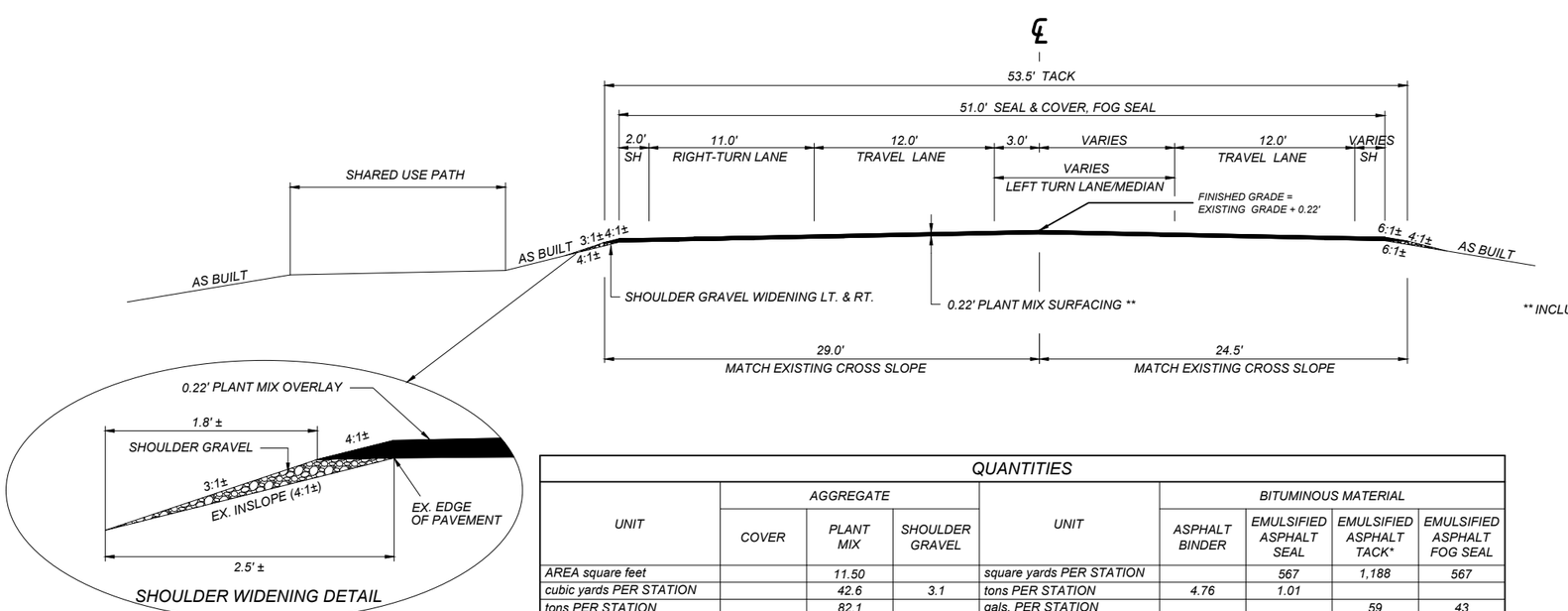

** INCLUDES 0.07' ISOLATION LIFT

NOTE: SEE TYP. NO. 1 FOR THE SHOULDER GRAVEL WIDENING DETAIL WITH 6:1 INSLOPE. RT.

QUANTITIES

UNIT	AGGREGATE			UNIT	BITUMINOUS MATERIAL			
	COVER	PLANT MIX	SHOULDER GRAVEL		ASPHALT BINDER	EMULSIFIED ASPHALT SEAL	EMULSIFIED ASPHALT TACK*	EMULSIFIED ASPHALT FOG SEAL
AREA square feet		11.50		square yards PER STATION		567	1,188	567
cubic yards PER STATION		42.6	3.1	tons PER STATION	4.76	1.01		
tons PER STATION		82.1		gals. PER STATION			59	43
square yards PER STATION	567							

* BASED ON 2 APPLICATIONS.

SHEET NO.
10

TYPICAL SECTION

PROJECT NAME: FLORENCE - EAST
COUNTY: RAVALLI
PROJECT ID: STPS 203-1(28)10
UPN: 10538000

DESIGNED BY: F. COBARRUBIAS 07/2025
REVIEWED BY: J. DOLD 12/2025
CHECKED BY: J. CERECK 12/2025

MONTANA Department of Transportation
ROAD PLANS

3/2/2026 10:16 AM
10538000RDTYP001.DWG

Docusign Envelope ID: A9A0746E-7614-8538-8284-8D9BDCE64452

AWARD COPY

626+81.07 ONLY
626+81.07 TO 627+45.07 TRANS. TYP. NO. 17 TO TYP. NO. 18

TYPICAL SECTION NO. 17

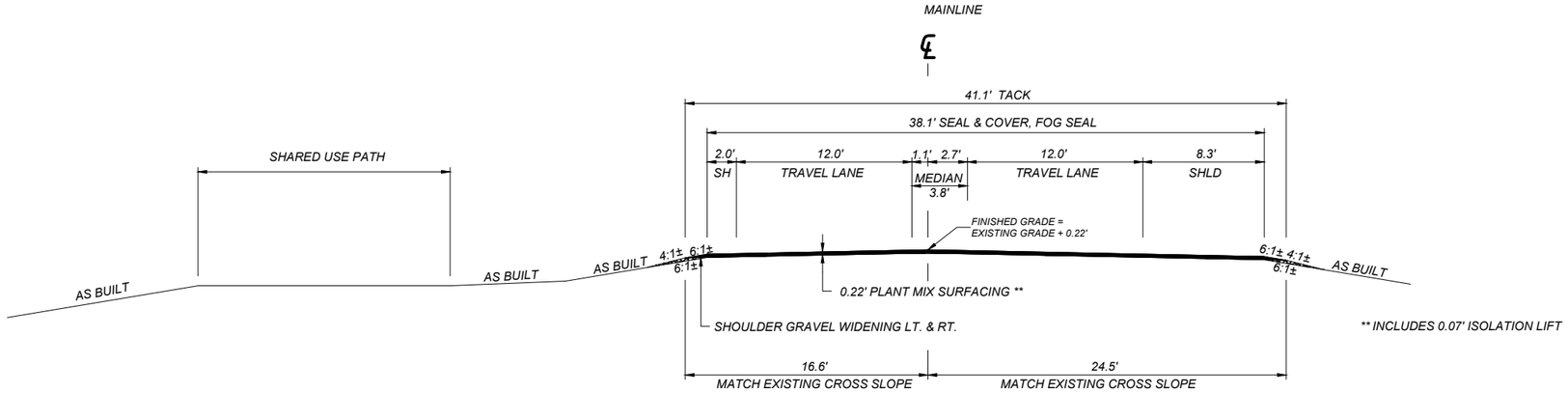

** INCLUDES 0.07' ISOLATION LIFT

QUANTITIES								
UNIT	AGGREGATE			UNIT	BITUMINOUS MATERIAL			
	COVER	PLANT MIX	SHOULDER GRAVEL		ASPHALT BINDER	EMULSIFIED ASPHALT SEAL	EMULSIFIED ASPHALT TACK*	EMULSIFIED ASPHALT FOG SEAL
AREA square feet		8.71		square yards PER STATION		423	914	423
cubic yards PER STATION		32.3	3.4	tons PER STATION	3.61	0.76		
tons PER STATION		62.3		gals. PER STATION			46	32
square yards PER STATION	423							
* BASED ON 2 APPLICATIONS								

NOTE: SEE TYP. NO. 1 FOR THE SHOULDER GRAVEL WIDENING DETAIL WITH 6:1 INSLOPE.

627+45.07 TO 628+97.07
628+97.07 TO 629+16.77 TRANS. TYP. NO. 18 TO TYP. NO. 19

TYPICAL SECTION NO. 18

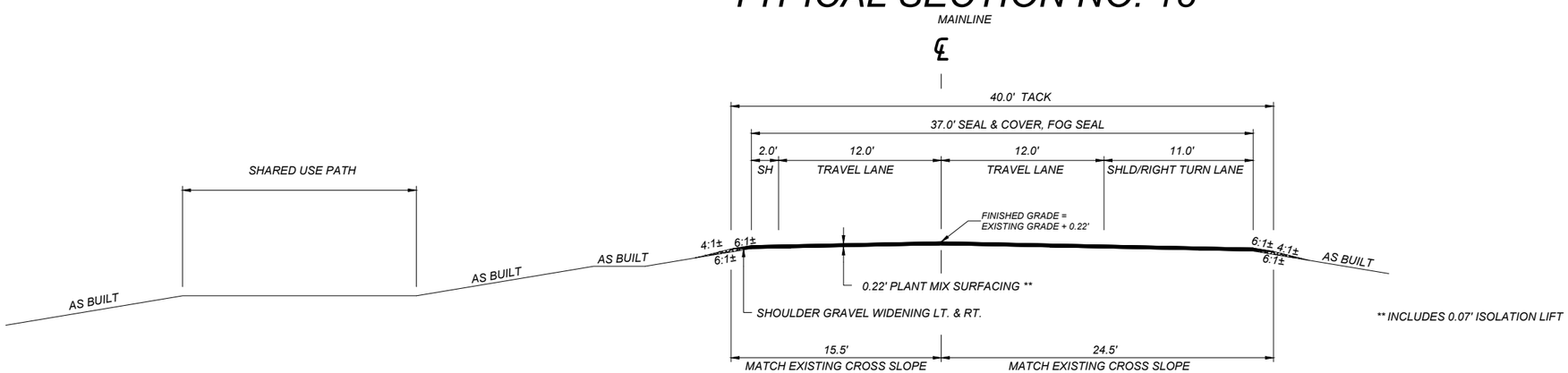

** INCLUDES 0.07' ISOLATION LIFT

NOTE: SEE TYP. NO. 1 FOR THE SHOULDER GRAVEL WIDENING DETAIL WITH 6:1 INSLOPE.

NOTE: THE ROADWAY IS IN A TAPER MILL AND OVERLAY FROM 626+83.84 (0.0' COLD MILLING) TO 628+83.84 (0.22' COLD MILLING). SEE DETAILS AND COLD MILLING SUMMARY FRAME FOR COLD MILLING DETAILS AND QUANTITIES.

QUANTITIES								
UNIT	AGGREGATE			UNIT	BITUMINOUS MATERIAL			
	COVER	PLANT MIX	SHOULDER GRAVEL		ASPHALT BINDER	EMULSIFIED ASPHALT SEAL	EMULSIFIED ASPHALT TACK*	EMULSIFIED ASPHALT FOG SEAL
AREA square feet		8.47		square yards PER STATION		411	888	411
cubic yards PER STATION		31.4	3.4	tons PER STATION	3.51	0.73		
tons PER STATION		60.5		gals. PER STATION			44	31
square yards PER STATION	411							
* BASED ON 2 APPLICATIONS								

SHEET NO.
11

TYPICAL SECTION

PROJECT NAME FLORENCE - EAST
COUNTY RAVALLI
PROJECT ID STPS 203-1(28)10
UPN 10538000

DESIGNED BY F. COBARRUBIAS 07/2025
REVIEWED BY J. DOLD 12/2025
CHECKED BY J. CERECK 12/2025

MONTANA Department of Transportation
ROAD PLANS

10538000RDTYP001.DWG
3/2/2026 10:16 AM

Docusign Envelope ID: A9A0746E-7614-8538-8284-8D9BDCE64452

AWARD COPY

629+16.77		ONLY
629+16.77	TO 629+44.54	TRANS. TYP. NO. 19 TO TYP NO. 20

TYPICAL SECTION NO. 19

MAINLINE

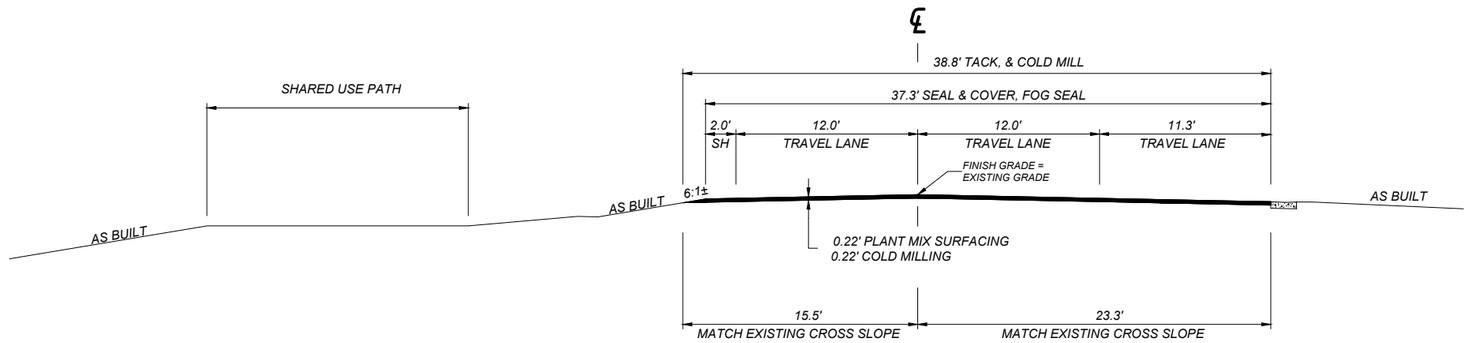

QUANTITIES							
UNIT	AGGREGATE		UNIT	BITUMINOUS MATERIAL			
	COVER	PLANT MIX		ASPHALT BINDER	EMULSIFIED ASPHALT SEAL	EMULSIFIED ASPHALT TACK*	EMULSIFIED ASPHALT FOG SEAL
AREA square feet		8.37	square yards PER STATION		414	862	414
cubic yards PER STATION		31.0	tons PER STATION	3.47	0.74		
tons PER STATION		59.8	gals. PER STATION			43	31
square yards PER STATION	414						
* BASED ON 2 APPLICATIONS							

629+44.54		ONLY, THEN TO TYP. NO. 21

TYPICAL SECTION NO. 20

MAINLINE

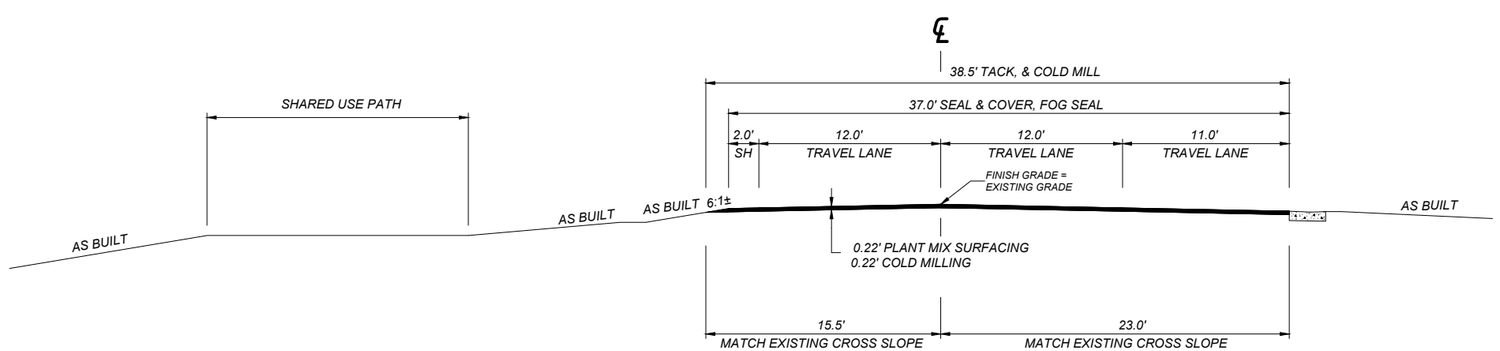

QUANTITIES							
UNIT	AGGREGATE		UNIT	BITUMINOUS MATERIAL			
	COVER	PLANT MIX		ASPHALT BINDER	EMULSIFIED ASPHALT SEAL	EMULSIFIED ASPHALT TACK*	EMULSIFIED ASPHALT FOG SEAL
AREA square feet		8.31	square yards PER STATION		411	856	411
cubic yards PER STATION		30.8	tons PER STATION	3.45	0.73		
tons PER STATION		59.4	gals. PER STATION			43	31
square yards PER STATION	411						
* BASED ON 2 APPLICATIONS							

SHEET NO.
12

TYPICAL SECTION

PROJECT NAME: FLORENCE - EAST
COUNTY: RAVALLI
PROJECT ID: STPS 203-1(28)10
UPN: 10538000

DESIGNED BY: F. COBARRUBIAS 07/2025
REVIEWED BY: J. DOLD 12/2025
CHECKED BY: J. CERECK 12/2025

MONTANA Department of Transportation
ROAD PLANS

10538000RDTYP001.DWG
3/2/2026 10:16 AM

Docusign Envelope ID: A9A0746E-7614-8538-8284-8D9BDCE64452

AWARD COPY

629+44.54 TO 630+83.84

TYPICAL SECTION NO. 21

MAINLINE

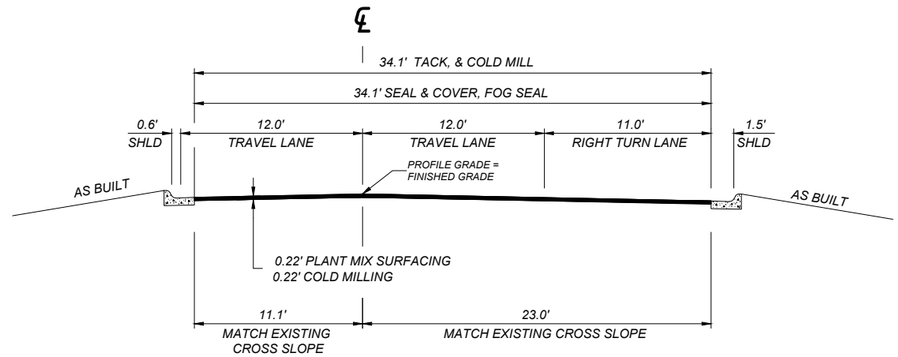

QUANTITIES							
UNIT	AGGREGATE		UNIT	BITUMINOUS MATERIAL			
	COVER	PLANT MIX		ASPHALT BINDER	EMULSIFIED ASPHALT SEAL	EMULSIFIED ASPHALT TACK*	EMULSIFIED ASPHALT FOG SEAL
AREA square feet		7.50	square yards PER STATION		379	758	379
cubic yards PER STATION		27.8	tons PER STATION	3.11	0.68		
tons PER STATION		53.6	gals. PER STATION			38	28
square yards PER STATION	379						

* BASED ON 2 APPLICATIONS

SHEET NO.
13

TYPICAL SECTION

PROJECT NAME: FLORENCE - EAST
COUNTY: RAVALLI
PROJECT ID: STPS 203-1(28)10
UPN: 10538000

DESIGNED BY: F. COBARRUBIAS 07/2025
REVIEWED BY: J. DOLD 12/2025
CHECKED BY: J. CERECK 12/2025

MONTANA Department of Transportation
ROAD PLANS

3/2/2026 10:16 AM
10538000RDTYP001.DWG

Docusign Envelope ID: A9A0746E-7614-8538-8284-8D9BDCE64452

AWARD COPY

SUMMARY

SURFACING

STATION FROM	STATION TO	linear feet GROSS	linear feet NET	linear feet +	linear feet -	FOR	tons HYDRATED LIME	AGGREGATE sq. yards COVER TYPE 2	AGGREGATE tons PLANT MIX SURF - 1/2 IN	AGGREGATE cu. yards CRUSHED AGG. COURSE	AGGREGATE cu. yards SHOULDER GRAVEL	BITUMINOUS MATERIAL tons ASPHALT BINDER PG 58H-34	BITUMINOUS MATERIAL tons EMULSIFIED ASPHALT SEAL CHFRS-2P	BITUMINOUS MATERIAL gals. EMULSIFIED ASPHALT TACK	BITUMINOUS MATERIAL gals. EMULSIFIED ASPHALT FOG SEAL	REMARKS
518+62.80	527+05.00	842.20	842.20					4,118	602		29	35.0	7.3	438	312	TYP. NO. 1
527+05.00	528+25.00	120.00	120.00					613	90		4	5.2	1.1	65	46	TRANS. TYP. NO. 1 TO TYP. NO. 2
528+25.00	529+06.59	81.59	81.59					435	63		3	3.7	0.8	47	33	TYP. NO. 2
529+06.59	529+80.59	74.00	74.00					444	64		3	3.7	0.8	47	33	TRANS. TYP. NO. 2 TO TYP. NO. 3
529+80.59	530+76.59	96.00	96.00					576	84		3	4.9	1.0	61	43	TRANS. TYP. NO. 3 TO TYP. NO. 2
530+76.59	531+00.00	23.41	23.41					125	18		1	1.1	0.2	13	9	TYP. NO. 2
531+00.00	532+80.00	180.00	180.00					982	143		3	8.3	1.8	104	74	TRANS. TYP. NO. 2 TO TYP. NO. 4
532+80.00	534+00.00	120.00	120.00					643	94			5.4	1.2	68	49	TRANS. TYP. NO. 4 TO TYP. NO. 5
534+00.00	534+50.00	50.00	50.00					262	38			2.2	0.5	28	20	TRANS. TYP. NO. 5 TO TYP. NO. 6
534+50.00	535+75.27	125.27	125.27					658	95			5.5	1.2	69	49	TRANS. TYP. NO. 6 TO TYP. NO. 7
535+75.27	539+49.00	373.73			373.73	ROUNDABOUT										
539+49.00	541+02.75	153.75	153.75					1,149	166			9.6	2.1	120	87	TRANS. TYP. NO. 8 TO TYP. NO. 9
541+02.75	541+56.70	53.95	53.95					366	53			3.1	0.7	38	28	TRANS. TYP. NO. 9 TO TYP. NO. 10
541+56.70	543+42.75	186.05	186.05					1,190	173			10.0	2.1	126	89	TRANS. TYP. NO. 10 TO TYP. NO. 11
543+42.75	544+62.75	120.00	120.00					746	108		2	6.3	1.3	79	56	TRANS. TYP. NO. 11 TO TYP. NO. 12
544+62.75	550+70.00	607.25	607.25					3,373	492		18	28.5	6.0	358	255	TRANS. TYP. NO. 12 TO TYP. NO. 1
550+70.00	557+76.00	706.00	706.00					3,452	505		24	29.3	6.1	367	261	TYP. NO. 1
557+76.00	558+27.00	51.00	51.00					249	36			2.1	0.4	27	19	TYP. NO. 13
558+27.00	559+47.00	120.00	120.00					560	80			4.7	1.0	58	42	TRANS. TYP. NO. 13 TO TYP. NO. 14
559+47.00																
559+76.00 BE	563+54.05 BE				378.05	BRIDGE										
	563+62.00	415.00	36.95					164	23			1.3	0.3	16	12	TYP. NO. 14
563+62.00	564+82.00	120.00	120.00					560	80			4.7	1.0	58	42	TRANS. TYP. NO. 14 TO TYP. NO. 13
564+82.00	565+54.05	72.05	72.05					352	51			3.0	0.6	37	27	TYP. NO. 13
565+54.05	616+62.00	5,107.95	5,107.95					24,978	3,652		174	212.0	44.4	2,656	1,890	TYP. NO. 1
616+62.00	617+48.00	86.00	86.00					430	63		3	3.6	0.8	46	32	TRANS. TYP. NO. 1 TO TYP. NO. 15
617+48.00	622+78.00	530.00	530.00					2,708	395		18	22.9	4.8	286	201	TYP. NO. 15
622+78.00	623+50.00	72.00	72.00					388	56		2	3.3	0.7	41	29	TRANS. TYP. NO. 15 TO TYP. NO. 16
623+50.00	625+71.07	221.07	221.07					1,253	181		7	10.5	2.2	130	95	TYP. NO. 16
625+71.07	626+81.07	110.00	110.00					545	79		4	4.6	1.0	58	41	TRANS. TYP. NO. 16 TO TYP. NO. 17
626+81.07	627+45.07	64.00	64.00					267	39		2	2.3	0.5	29	20	TRANS. TYP. NO. 17 TO TYP. NO. 18
627+45.07	628+97.07	152.00	152.00					625	92		5	5.3	1.1	67	47	TYP. NO. 18
628+97.07	629+16.77	19.70	19.70					81	12			0.7	0.1	9	6	TRANS. TYP. NO. 18 TO TYP. NO. 19
629+16.77	629+44.54	27.77	27.77					115	17			1.0	0.2	12	9	TRANS. TYP. NO. 19 TO TYP. NO. 20
629+44.54	630+83.84	139.30	139.30					528	75			4.3	0.9	53	39	TYP. NO. 21
						ADDITIONAL SURFACING		-216	195	1	9	11.3	-0.3	105	822	
TOTAL		**11,221.04**	**10,469.26**		**751.78**		**111**	**52,719**	**7,914**	**1**	**314**	**459.4**	**93.9**	**5,716**	**4,817**	

SHEET NO.
14

SUMMARY

PROJECT NAME: FLORENCE - EAST
COUNTY: RAVALLI
PROJECT ID: STPS 203-1(28)10
UPN: 10538000

DESIGNED BY: F. COBARRUBIAS 07/2025
REVIEWED BY: J. DOLD 12/2025
CHECKED BY: J. CERECK 12/2025

MONTANA Department of Transportation
ROAD PLANS

10538000RDSUM001.DWG
PFR

Docusign Envelope ID: A9A0746E-7614-8538-8284-8D9BDCE64452

AWARD COPY

SUMMARY

ADDITIONAL SURFACING (INCLUDED IN SURFACING FRAME)

STATION FROM	STATION TO	linear feet GROSS	linear feet NET	linear feet +	linear feet -	FOR	HYDRATED LIME	AGGREGATE sq. yards COVER TYPE 2	AGGREGATE tons PLANT MIX SURF - 1/2 IN	AGGREGATE cu. yards CRUSHED AGG. COURSE	AGGREGATE cu. yards SHOULDER GRAVEL	BITUMINOUS MATERIAL tons ASPHALT BINDER PG 58H-34	BITUMINOUS MATERIAL tons EMULSIFIED ASPHALT SEAL CHFRS-2P	BITUMINOUS MATERIAL gals. EMULSIFIED ASPHALT TACK	BITUMINOUS MATERIAL gals. EMULSIFIED ASPHALT FOG SEAL	REMARKS
585+88.86	586+88.86					PMS WIDENING UNDER CBR RT.			4			0.2		4		
586+09.25	587+29.25					PMS WIDENING UNDER CBR LT.			5			0.3		5		
						7- PUBLIC APPROACHES			102		6	5.9		22		
						17- PRIVATE APPROACHES			66			3.8		58		
						7- FARM FIELD APPROACHES			21			1.2		16		
						2 - CURB REPLACEMENT AREAS			3	1		0.2		3		NEAR THE INTERSECTION OF S-203 & US-93
518+62.80																
533+50.00 Bk	133+50.00 Ah			40,000.00		SHARED-USE PATH EQUATION										
	137+58.11	-38,104.69	1,895.31			SHARED-USE PATH (SUP) RT. (10' WIDE)									158	FROM BOP TO 8 MILE CREEK RD.
529+75.00	531+25.00	150.00	150.00			SUP LT. (10' WIDE)			25		3	1.5		19	13	FROM N. APPLE VALLEY WAY TO JUST NORTH OF PIN DOWN CURB
531+25.00	535+63.35	438.35	438.35			SUP LT. (10' WIDE)									37	FROM NORTH OF PIN DOWN CURB TO UNDERPASS
234+79.56	248+33.80	1,354.24	1,354.24			SUP S-203 UNDERPASS & LT. (10' WIDE)									113	FROM UNDERPASS TO NEW FARM RD.
548+66.29	559+65.01 B.E.	1,098.72	1,098.72			SUP LT. (10' WIDE)									92	FROM NEW FARM RD. TO E. BRIDGE END
563+43.34 B.E.	569+85.12	641.78	641.78			SUP LT. (10' WIDE)									53	FROM W. BRIDGE END TO FWP FAS APP.
584+85.33	629+46.04	4,460.71	4,460.71			SUP LT. (10' WIDE)									372	FROM JUST WEST OF APP. AT STA. 584+14 TO END OF SUP (JUST E. OF US-93)
630+14.00	630+83.84					S-203 & US-93 INT. RADIUS CHAMFERS LT. & RT.		142	20			1.2	0.3	14	11	
539+49.00	541+56.70					* RAISED MEDIAN QUANTITY REDUCTION		-358	-51			-3.0	-0.6	-36	-27	
SUBTOTAL		~	~	~	~		~	-216	195	1	9	11.3	-0.3	105	822	

*TACK COAT, OVERLAY, AND SEAL AND COVER QUANTITIES ARE DEDUCTED UNDER THE RAISED MEDIAN AREAS IN TYPICALS 8 AND 9. CUMULATIVE AREAS FROM THE 2 SEPARATE RAISED MEDIAN AREAS TOTALS 358 SQYD.

SUMMARY

PROJECT NAME: FLORENCE - EAST
COUNTY: RAVALLI
PROJECT ID: STPS 203-1(28)10
UPN: 10538000

DESIGNED BY: F. COBARRUBIAS 07/2025
REVIEWED BY: J. DOLD 12/2025
CHECKED BY: J. CERECK 12/2025

MONTANA Department of Transportation
ROAD PLANS

3/2/2026 10:16 AM
10538000RDSUM001.DWG

Docusign Envelope ID: A9A0746E-7614-8538-8284-8D9BDCE64452

AWARD COPY

SUMMARY

PAVEMENT MARKINGS

ITEM	UNIT	INTERIM APPLICA-TION #	FINAL APPLICA-TION	TOTAL
STRIPING - WHITE PAINT	gallon	186		186
STRIPING - YELLOW PAINT	gallon	130		130
WORDS & SYMBOLS - WHITE PAINT	gallon	50		50
WORDS & SYMBOLS - YELLOW PAINT	gallon	48		48
STRIPING - WHITE EPOXY	gallon		124	124
STRIPING - YELLOW EPOXY	gallon		88	88
WORDS & SYMBOLS - WHITE EPOXY	gallon		32	32
WORDS & SYMBOLS - YELLOW EPOXY	gallon		32	32
YELLOW CURB EPOXY	gallon		42	42
TEMPORARY STRIPING	linear feet			33,218
STRIPING - 4 IN WHITE - HIGH PERF TAPE	linear feet			10,550
STRIPING - 4 IN YELLOW - HIGH PERF TAPE	linear feet			4,950
STRIPE GROOVING (LONGITUDINAL ONLY)	linear feet			14,262
STRIPE GROOVING (WORDS & SYMBOLS)	square feet			526

BASED ON 2 APPLICATIONS.

RUMBLE STRIPS

STATION FROM	STATION TO	miles: SINUSOIDAL RUMBLE STRIPS: CENTERLINE *	miles: SINUSOIDAL RUMBLE STRIPS: INTERMITTENT SHOULDER	gals: EMULSIFIED ASPHALT FOG SEAL #	REMARKS
518+62.80	533+95.00		0.3	33	RT
548+76.00	556+80.00		0.1	16	LT
590+44.00	622+45.00	0.5		57	CENTERLINE
590+54.00	622+41.00		0.6	68	LT
SUBTOTAL		0.5	1.0	174	
TOTAL		1.5		~	

FOR INFORMATION ONLY, INCLUDE IN THE COST OF RUMBLE STRIPS
* INSTALL CENTERLINE RUMBLE STRIPS (CLRS) IN LEFT-TURN LANE ONLY AREAS (ONE SIDE), AND STRIPED MEDIAN AREAS (BOTH SIDES). OMIT CLRS ALONG ALL TWO-WAY LEFT TURN LANE SECTIONS.

GUARDRAIL @

STATION FROM	STATION TO	linear feet: REMOVE GUARDRAIL LEFT	REMOVE GUARDRAIL RIGHT	MGS GUARDRAIL LEFT	MGS GUARDRAIL RIGHT	RAISE GUARDRAIL # LEFT	RAISE GUARDRAIL # RIGHT	MGS INTERSECTING ROADWAY TERMINAL SECTION LEFT	MGS INTERSECTING ROADWAY TERMINAL SECTION RIGHT	each: MASH W-BEAM TERMINAL SECTION LEFT	MASH W-BEAM TERMINAL SECTION RIGHT	MGS ONE-WAY DEPARTURE TERMINAL SECTION LEFT	MGS ONE-WAY DEPARTURE TERMINAL SECTION RIGHT	BRIDGE APPROACH SECTION TYPE 1 LEFT	BRIDGE APPROACH SECTION TYPE 1 RIGHT	GUARDRAIL END SECTION WIDENING LEFT	GUARDRAIL END SECTION WIDENING RIGHT	REMARKS
NEW/RAISE RAIL																		
575+12.25	581+62.25				68.7		587.5		62.5				1					*24' RADIUS IRT - EAST SIDE & 8' RADIUS, 12.5' CURVE LENGTH SHOP BENT MGS GUARDRAIL - WEST SIDE **
578+60.88	582+85.83			56.2		300.0				2						2		*
585+35.76	585+88.86				65.6								1		1			*24' RADIUS, 37.5' CURVE LENGTH SHOP BENT MGS GUARDRAIL, WITH 1-WAY DEPARTURE TERMINAL SECTION **
585+22.78	586+09.25			28.1						1				1		1		*
586+88.86	587+76.34				28.1						1				1		1	*
587+29.25	589+91.73			28.1		175.0				1				1		1		*
REMOVE RAIL																		
575+12.25	581+62.25		143.7															
578+48.35	582+98.35	150.0																
585+35.76	585+85.76		100.0															
585+35.25	586+09.25	75.0																
586+85.76	587+67.76		75.0															
587+29.25	590+04.25	100.0																
SUBTOTAL		325.0	318.7	112.4	162.4	475.0	587.5	~	62.5	4	1	~	2	2	2	4	1	
TOTAL		643.7		274.8		1,062.5		62.5		5		2		4		5		

RAISE GUARDRAIL EXCLUDES TRANSITIONS AND TERMINAL SECTIONS. UNBOLT W-BEAM AND BLOCK FROM GUARDRAIL POST AND SET ASIDE, PLACE PLANT MIX OVERLAY, AND RAISE AND RE-BOLT W-BEAM AND BLOCK IN THE UPPER GUARDRAIL
* INCLUDES ONE OR TWO 28.1' LONG MGS TO METAL GUARDRAIL TRANSITIONS. SEE DETAILED DRAWING NO. 606-20.
** ON GUARDRAIL NOT PAID AS MGS INTER. ROADWAY TERM. SECT., USE SHOP BENT MGS GUARDRAIL, FOLLOWED BY A ONE-WAY DEPARTURE TERMINAL SECTION. USE W-BEAM END SECTION BUFFER (RWE06a-b) TO MATCH EX. CONDITIONS.
@ FOR ALL GUARDRAIL REPLACEMENTS WHERE NEW POSTS ARE BEING INSTALLED, CALL 811 AND LOCATE ALL UTILITIES PRIOR TO INSTALLING NEW POSTS.

CRACK SEALING

STATION FROM	STATION TO	TRANSVERSE & LONGITUDINAL CRACK SEALING: CRACK SEALING pounds	CRACK SEALING linear feet	MASTIC CRACK FILLING pounds	MASTIC CRACK FILLING linear feet	MASTIC CRACK FILLING area (sq ft)	REMARKS
S-203							
518+62.80	630+83.84	4,025	5,750	8,172	91	786	
SHARED-USE PATH							
518+62.80	629+46.04	925	1,322	85	50		
TOTAL		4,950	#	8,257	#	#	

FOR INFORMATION ONLY

SHEET NO. 16

SUMMARY

PROJECT NAME: FLORENCE - EAST
COUNTY: RAVALLI
PROJECT ID: STPS 203-1(28)10
UPN: 105380000

DESIGNED BY: F. COBARRUBIAS 10/2025
REVIEWED BY: J. DOLD 12/2025
CHECKED BY: J. CERECK 12/2025
105380000RDSUM001.DWG

MONTANA Department of Transportation
ROAD PLANS

3/2/2026 10:16 AM

Docusign Envelope ID: A9A0746E-7614-8538-8284-8D9BDCE64452

AWARD COPY

SUMMARY

COLD MILLING *

STATION FROM	STATION TO	sq. yards COLD MILLING 0.22'	sq. yards COLD MILLING 0.22' - 0.00'	sq. yards REMOVE BITUMINOUS PAVEMENT	REMARKS
518+62.80	520+62.80		1,044		47' WIDTH
530+80.00	531+00.00		113		51' WIDTH
531+00.00	532+80.00		1,042		51' TO 53.2' WIDTH
532+80.00	534+00.00	683			53.2' TO 49.3' WIDTH
534+00.00	534+50.00	279			49.3' TO 51' WIDTH
534+50.00	535+75.27	689			51' TO 48' WIDTH
539+49.00	541+02.75	1,200			74.5' TO 66' WIDTH
541+02.75	541+56.70	384			66' TO 62.1' WIDTH
541+56.70	543+42.75	1,252			62.1' TO 59' WIDTH
543+42.75	544+62.75		787		59' WIDTH
544+62.75	545+42.75		517		59' TO 57.4' WIDTH
555+51.00	557+51.00		1,044		47' WIDTH
557+51.00	557+76.00	131			47' WIDTH
557+76.00	558+27.00	263			46.4' WIDTH
558+27.00	559+47.00	576			46.4 TO 40' WIDTH
559+47.00	559+76.00 BE	129			40' WIDTH
563+54.05 BE	563+62.00	35			40' WIDTH
563+62.00	564+82.00	576			40' TO 46.4' WIDTH
564+82.00	565+54.05	371			46.4' WIDTH
565+54.05	566+04.05	261			47' WIDTH
566+04.05	568+04.05		1,044		47' WIDTH
626+83.84	627+45.07		276		41.1' TO 40' WIDTH
627+45.07	628+83.84		617		40' WIDTH
628+83.84	629+16.77	144			40' TO 38.8 WIDTH
629+16.77	629+44.54	119			38.8' TO 38.5' WIDTH
629+44.54	630+83.84	528			34.1' WIDTH
			160		7 - FARM FIELD APPROACHES
			582		17 - PRIVATE APPROACHES
			221		7 - PUBLIC APPROACHES
		142			S-203 & US-93 INTX. RADIUS CHAMFERS LT. & RT.
		-358			# RAISED MEDIAN QUANTITY REDUCTION
531+10.00	531+25.00			19	SUP PAVEMENT REMOVAL N. OF APPLE VALLEY WAY. SEE DETAIL
SUBTOTAL		7,404	7,447	19	
TOTAL		14,851		19	

* SEE DETAILS
# COLD MILLING QUANTITIES ARE DEDUCTED UNDER THE RAISED MEDIAN AREAS IN TYPICALS 8 AND 9. CUMULATIVE AREAS FROM THE 2 SEPARATE RAISED MEDIAN AREAS TOTALS 358 SQYD.

CONCRETE BARRIER RAIL

STATION FROM	STATION TO	each RESET CONCRETE BARRIER RAIL LEFT	each RESET CONCRETE BARRIER RAIL RIGHT	REMARKS
585+88.86	586+88.86		10	*
586+09.25	587+29.25	12		*
SUBTOTAL		12	10	
TOTAL		22		

* SEE DETAIL.

CURB

STATION FROM	STATION TO	linear feet CONCRETE CURB AND GUTTER LEFT	CONCRETE CURB AND GUTTER RIGHT	REMOVE CURB AND GUTTER # LEFT	REMOVE CURB AND GUTTER # RIGHT	MEDIAN CONCRETE CURB TYPE A	REMOVE MEDIAN CURB #	REMARKS
529+80.00	531+00.00					120.0	120.0	LT.- NORTH OF APPLE VALLEY WAY.*
630+24.00	630+40.00		26.2		15.3			SPANNING ACROSS REMOVED RAILROAD AT-GRADE CROSSING - NE CORNER S-203 & US-93. SEE DETAIL.
630+49.00	630+83.00	34.4		20.3				SPANNING ACROSS REMOVED RAILROAD AT-GRADE CROSSING - SE CORNER S-203 & US-93. SEE DETAIL.
SUBTOTAL		34.4	26.2	20.3	15.3	120.0	120.0	
TOTAL		60.6		~		120.0	~	

FOR INFORMATION ONLY, INCLUDE IN THE COST OF CONCRETE CURB AND GUTTER AND MEDIAN CONCRETE CURB TYPE A.
* SEE DETAIL.

SIDEWALK

STATION FROM	STATION TO	sq. yards CONCRETE SIDEWALK 4" LEFT	CONCRETE SIDEWALK 4" RIGHT	DETECTABLE WARNING DEVICES TYPE 1 LEFT	DETECTABLE WARNING DEVICES TYPE 1 RIGHT	REMOVE ASPHALT/SIDEWALK # LEFT	REMOVE ASPHALT/SIDEWALK # RIGHT	linear feet WIDTH	REMARKS
529+75.00		3.7		2.2		3.7		11.0	APPLE VALLEY WAY *
630+17.00	630+40.00		12.8				12.8	VARIES	SPANNING ACROSS REMOVED RAILROAD AT-GRADE CROSSING & INTO SIDEWALK - NE CORNER S-203 & US-93. SEE DETAIL.
630+71.00	630+89.00	12.1				12.1		10.0	SPANNING ACROSS REMOVED RAILROAD AT-GRADE CROSSING - SE CORNER S-203 & US-93. SEE DETAIL.
SUBTOTAL		15.8	12.8	2.2	~	15.8	12.8	~	
TOTAL		28.6		2.2		~		~	

* SEE DETAIL.
# FOR INFORMATION ONLY - INCLUDE IN THE COST OF CONCRETE SIDEWALK.

REVEGETATION

STATION FROM	STATION TO	lump sum REVEGE-TATION	REMARKS
518+62.80	630+83.84	1	FOR GUARDRAIL END SECTION WIDENING, SHOULDER GRAVEL WIDENING FOR ASPHALT OVERLAY, & SIDEWALK REPLACEMENT
TOTAL		1	

SEE SPECIAL PROVISION

SUMMARY

PROJECT NAME: FLORENCE - EAST
COUNTY: RAVALLI
PROJECT ID: STPS 203-1(28)10
UPN: 10538000

DESIGNED BY: F. COBARRUBIAS 10/2025
REVIEWED BY: J. DOLD 12/2025
CHECKED BY: J. CERECK 12/2025

10538000RDSUM001.DWG

MONTANA Department of Transportation

ROAD PLANS

3/2/2026 10:16 AM

Docusign Envelope ID: A9A0746E-7614-8538-8284-8D9BDCE64452

AWARD COPY

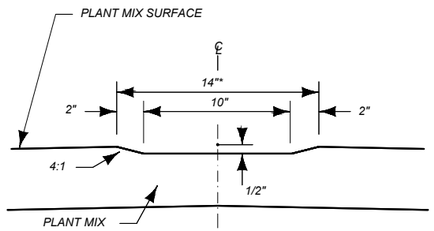

SECTION B-B

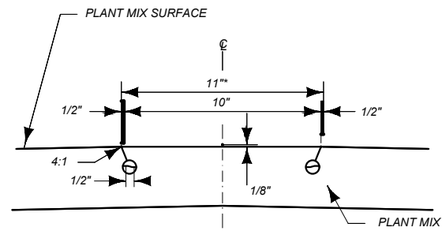

SECTION C-C

* TOP WIDTH MAY VARY DEPENDING ON PAVEMENT SURFACE IRREGULARITIES.

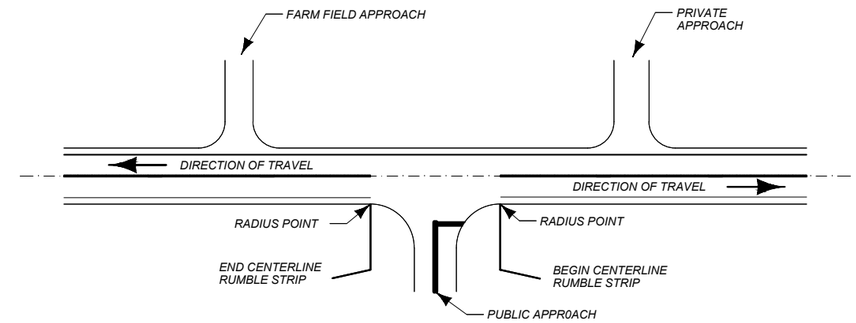

SINUSOIDAL CENTERLINE RUMBLE STRIP APPROACH DETAIL

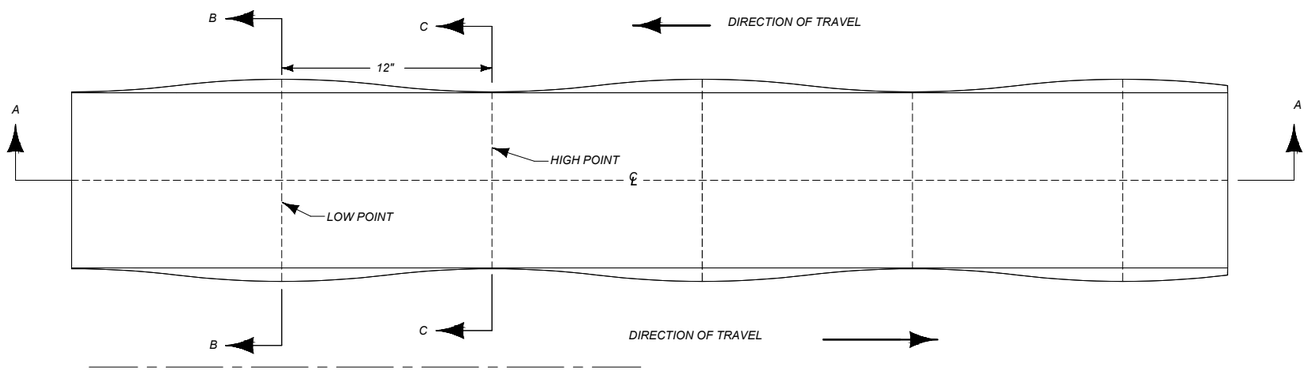

SINUSOIDAL CENTERLINE RUMBLE STRIP WITH TAPERED GROOVE PLAN VIEW

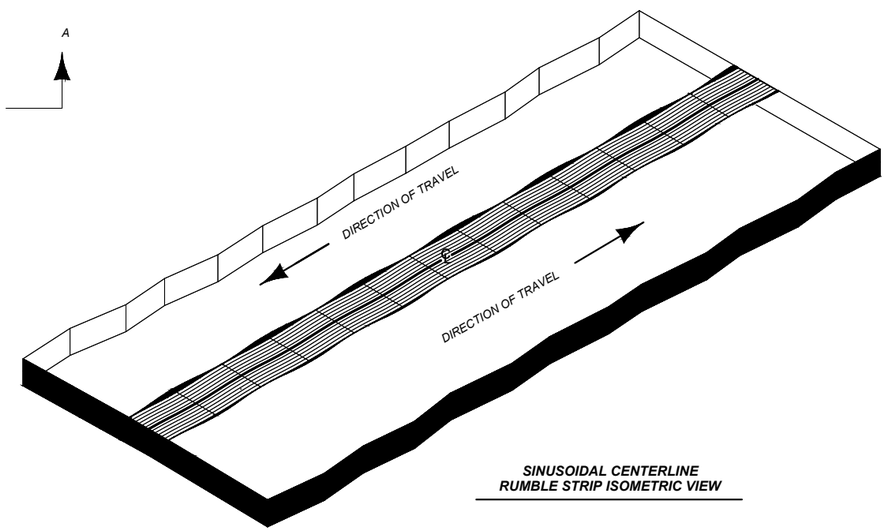

SINUSOIDAL CENTERLINE RUMBLE STRIP ISOMETRIC VIEW

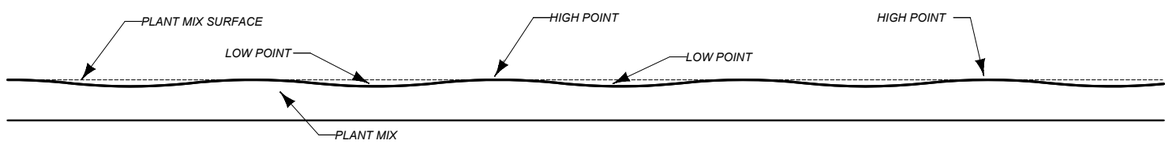

SECTION A-A

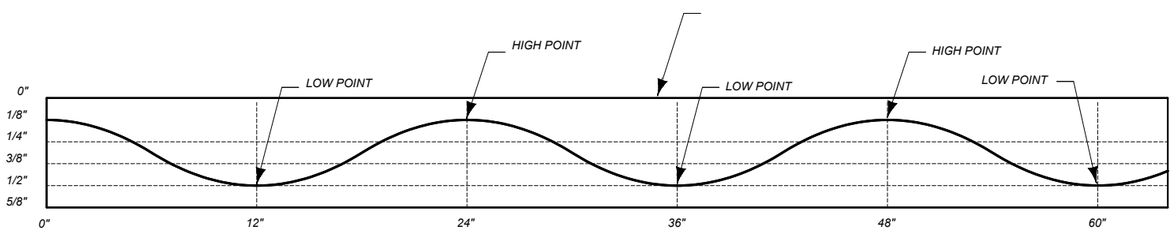

SINUSOIDAL CENTERLINE RUMBLE STRIP PROFILE VIEW

EXAGGERATED VERTICAL SCALE 10:1

NOTES:
BREAK SINUSOIDAL CENTERLINE RUMBLE STRIPS FOR PUBLIC APPROACHES ONLY.

INSTALL SINUSOIDAL CENTERLINE RUMBLE STRIPS ACROSS LEFT TURN LANES AND STRIPED MEDIANS.

DO NOT INSTALL SINUSOIDAL CENTERLINE RUMBLE STRIPS ON CONCRETE BRIDGE DECKS AND CONCRETE BRIDGE APPROACH SLABS.

DO NOT INSTALL SINUSOIDAL CENTERLINE RUMBLE STRIPS IN AREAS POSTED AT 45 MPH OR LESS.

ROUTES WITHIN DESIGNATED CITY OR URBAN LIMITS USE ENGINEERING JUDGEMENT ON A CASE BY CASE BASIS TO DETERMINE IF SINUSOIDAL CENTERLINE RUMBLE STRIP INSTALLATION IS APPROPRIATE.

MINIMUM VERTICAL MILLING DEPTHS AND DIFFERENCE BETWEEN MILLING HIGH POINTS AND LOW POINTS SHOWN IN DETAIL. ADDITIONAL 1/8" DEPTH OF MILLING IS ALLOWABLE ON INSTALLATION OF SINUSOIDAL CENTERLINE RUMBLE STRIP.

SEE DETAILED DRAWING 620-30 FOR CENTERLINE RUMBLE STRIP PAVEMENT MARKING INFORMATION.

OMIT CENTERLINE RUMBLE STRIPES IN AREAS WHERE TWO WAY LEFT TURN LANES ARE PRESENT UNLESS SPECIFIED IN PROJECT PLANS AND/OR SPECIAL PROVISIONS. CENTERLINE RUMBLE STRIPES MAY BE INSTALLED THROUGH TWO WAY LEFT TURN LANES ON A CASE BY CASE BASIS AS A RESULT OF SAFETY ENGINEERING ANALYSIS DEMONSTRATING NEED.

SHEET NO.
18

24" SINUSOIDAL CENTERLINE RUMBLE STRIP 10" WIDE TAPERED GROOVE DETAIL

PROJECT NAME: FLORENCE - EAST
COUNTY: RAVALLI
PROJECT ID: STPS 203-1(28)10
UPN: 10538000

DESIGNED BY	F. COBARRUBIAS	10/2025	
REVIEWED BY	J. DOLD	12/2025	
CHECKED BY	J. CERECK	12/2025	10538000RDDET001.DWG

MONTANA Department of Transportation

ROAD PLANS

3/2/2026 10:16 AM

Docusign Envelope ID: A9A0746E-7614-8538-8284-8D9BDCE64452

AWARD COPY

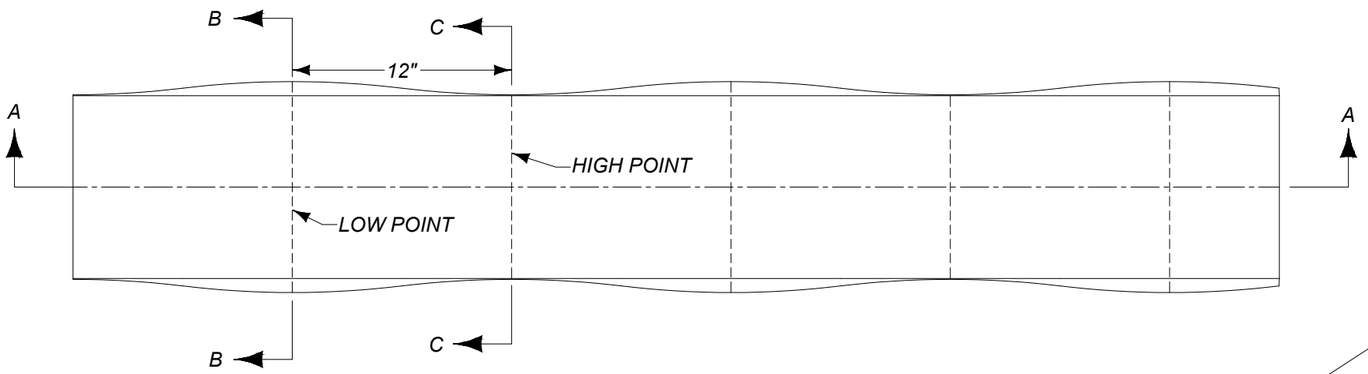

SINUSOIDAL SHOULER RUMBLE STRIP WITH TAPERED GROOVE PLAN VIEW

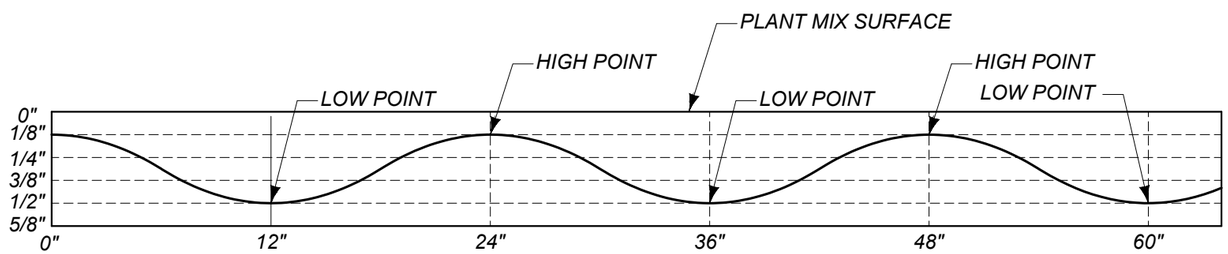

SECTION A-A

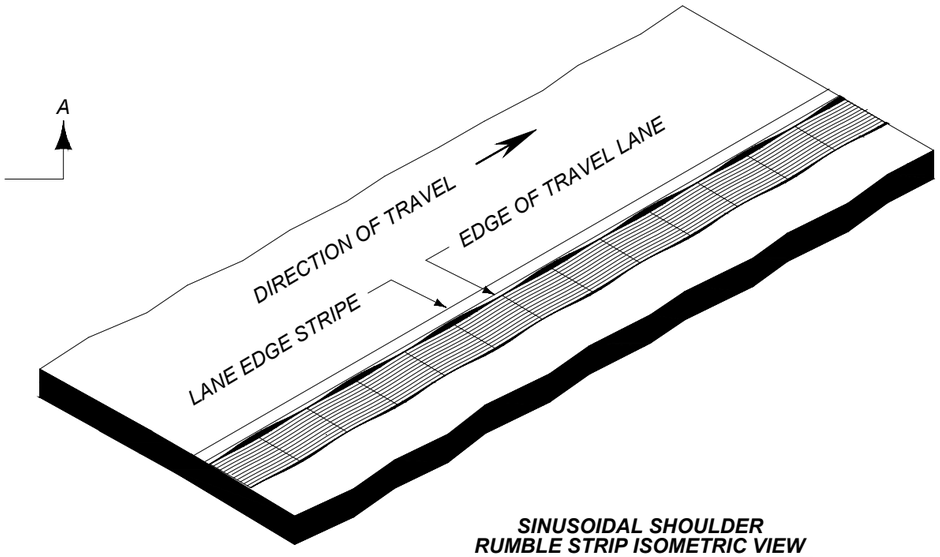

SINUSOIDAL SHOULDER RUMBLE STRIP ISOMETRIC VIEW

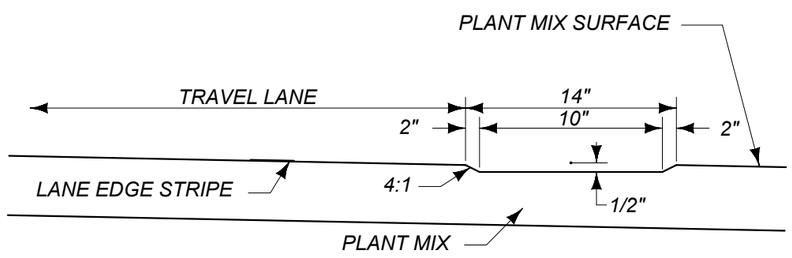

SECTION B-B

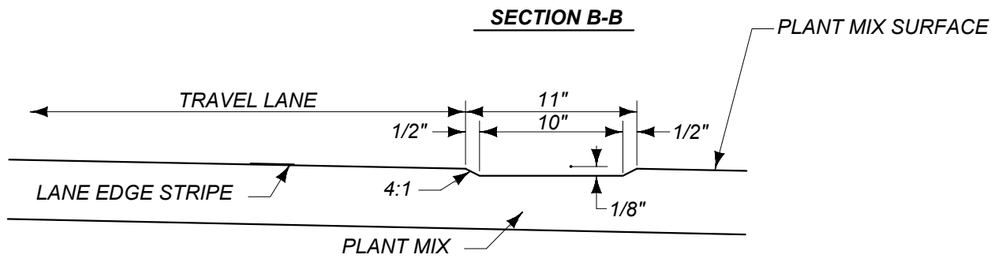

SECTION C-C

NOTES:

SEE DETAIL DRAWING 411-03 FOR REQUIREMENTS FOR INTERMITTENT RUMBLE STRIP SPACING AND DISCONTINUING RUMBLE STRIPS AT PUBLIC APPROACHES, INTERSTATE RAMPS AND GUARDRAIL RUNS.

DO NOT INSTALL SINUSOIDAL SHOULDER RUMBLE STRIPS ON CONCRETE BRIDGE DECKS AND CONCRETE BRIDGE APPROACH SLABS.

MINIMUM VERTICAL MILLING DEPTHS AND DIFFERENCE BETWEEN MILLING HIGH POINTS AND LOW POINTS SHOWN IN DETAIL. ADDITIONAL 1/8" DEPTH OF MILLING IS ALLOWABLE ON INSTALLATION OF SINUSOIDAL SHOULDER RUMBLE STRIPS.

SHEET NO.
19

SINUSOIDAL SHOULDER RUMBLE STRIPS DETAIL

PROJECT NAME: FLORENCE - EAST
COUNTY: RAVALLI
PROJECT ID: STPS 203-1(28)10
UPN: 10538000

DESIGNED BY: F. COBARRUBIAS 12/2025
REVIEWED BY: J. DOLD 12/2025
CHECKED BY: J. CERECK 12/2025

MONTANA Department of Transportation
ROAD PLANS

10538000RDDET009.DWG
12/23/2025 8:42 AM

Docusign Envelope ID: A9A0746E-7614-8538-8284-8D9BDCE64452

AWARD COPY

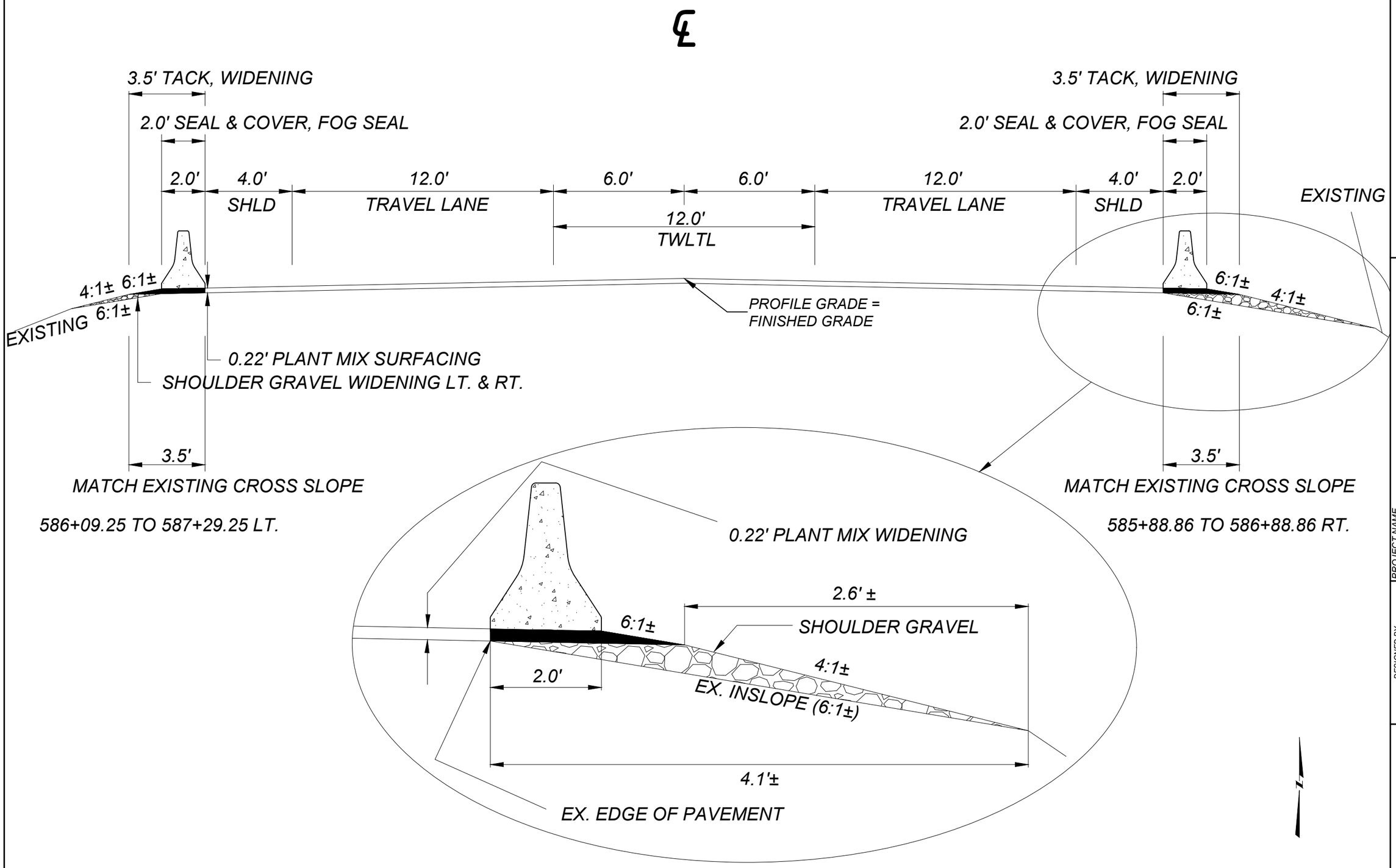

SHEET NO.
20

PMS WIDENING
UNDER CBR
DETAIL

PROJECT NAME: FLORENCE - EAST
COUNTY: RAVALLI
PROJECT ID: STPS 203-1(28)10
UPN: 10538000

DESIGNED BY: F. COBARRUBIAS 09/2025
REVIEWED BY: J. DOLD 12/2025
CHECKED BY: J. CERECK 12/2025

MONTANA
Department of Transportation
ROAD PLANS

3/2/2026 10:17 AM
10538000RDDET001.DWG

Docusign Envelope ID: A9A0746E-7614-8538-8284-8D9BDCE64452

AWARD COPY

APPROACHES & PULLOUTS PAVING CONNECTIONS DETAIL

USE METHOD TO BEST FIT FIELD CONDITIONS

OPTION 1 FOR PRIVATE/FARM FIELD & PULLOUTS

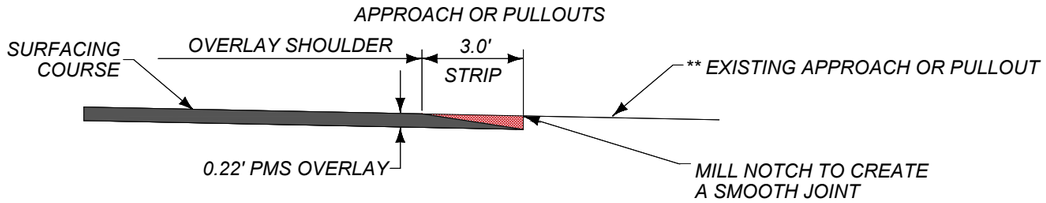

** COLD MILL NOTCH IF EXISTING APPROACH/PULLOUT IS PAVED. THE FINAL COLD MILLING DISTANCES & DEPTH TO BE DETERMINED BY THE MDT PROJECT MANAGER.

OPTION 2 FOR PRIVATE/FARM FIELD & PULLOUTS

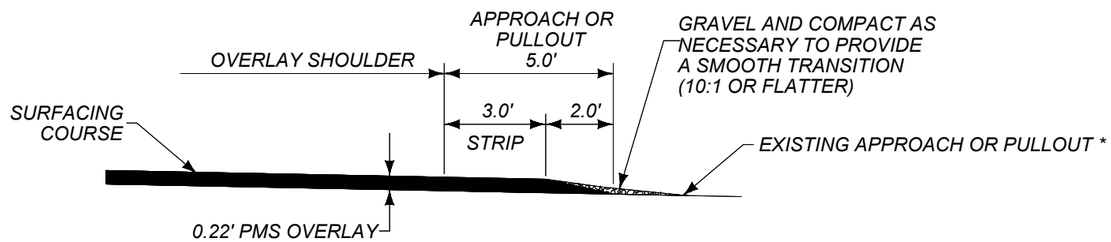

PULLOUTS

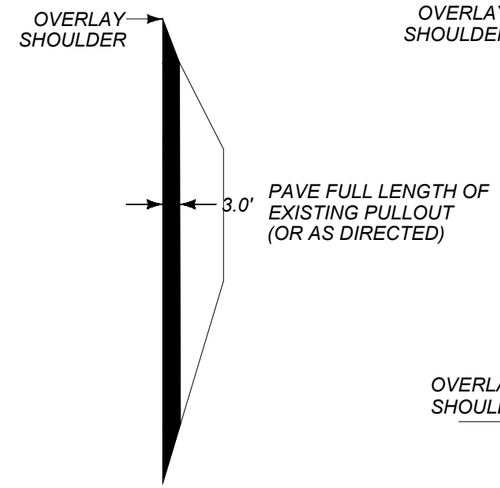

PRIVATE/FARM FIELD

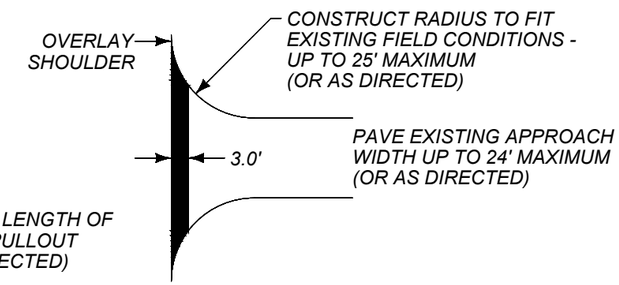

PUBLIC APPROACH

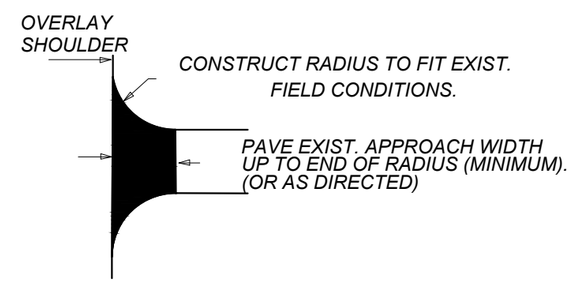

OPTION 1 FOR PUBLIC APPROACHES

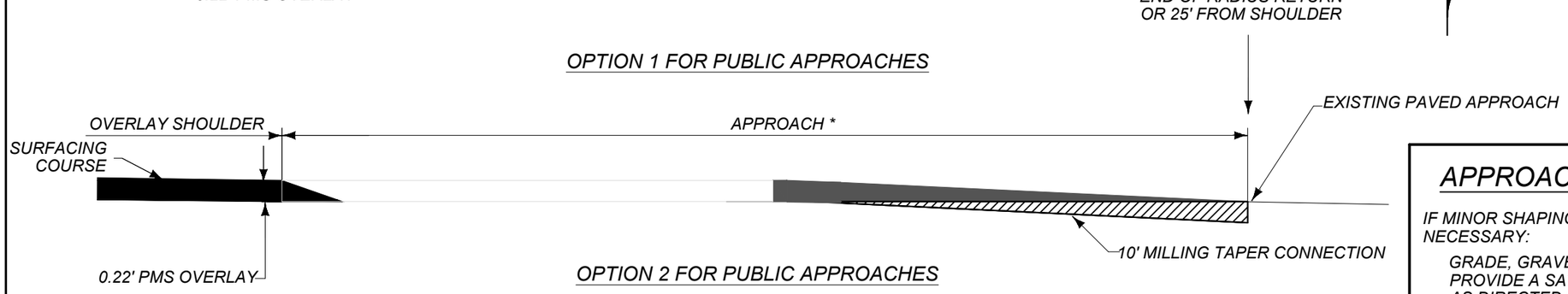

OPTION 2 FOR PUBLIC APPROACHES

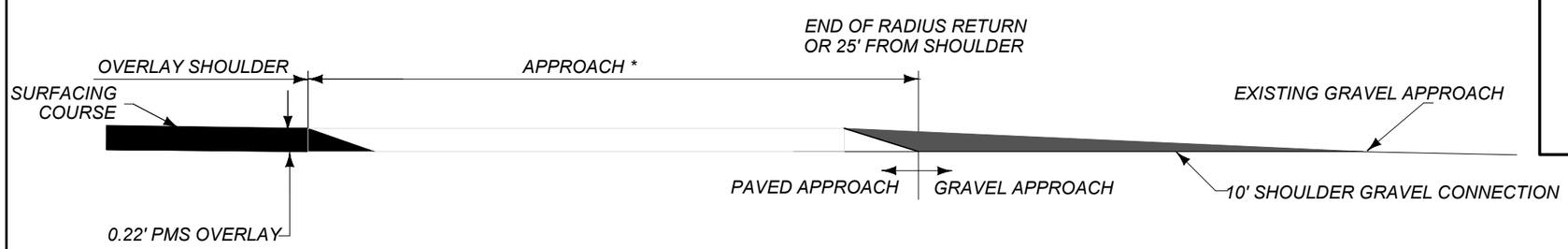

APPROACH PAVING PREPARATION

IF MINOR SHAPING OF EXISTING APPROACHES IS NECESSARY:

GRADE, GRAVEL AND COMPACT AS NEEDED TO PROVIDE A SATISFACTORY PAVING SURFACE AND AS DIRECTED BY PROJECT MANAGER.

GRAVEL USED FOR APPROACH PREPARATION IS MEASURED AND PAID FOR AS SHOULDER GRAVEL.

INCLUDE ALL OTHER WORK FOR APPROACH PAVING PREPARATION IN THE CONTRACT UNIT PRICE PER TON OF PLANT MIX.

NOTE: APPROACH DETAIL ONLY APPLIES WITHIN THE OVERLAY SECTION ONLY

*APPROACH AND PULLOUTS PAVING LENGTH AND MILLING TAPER LENGTH IS STATED ELSEWHERE IN THE PLANS (APPROACHES AND PULLOUTS TABLE) OR AS DIRECTED BY PROJECT MANAGER.

PROJECT NAME	FLORENCE - EAST
COUNTY	RAVALLI
PROJECT ID	STPS 203-1(28)10
UPN	10538000
DESIGNED BY	F. COBARRUBIAS 09/2025
REVIEWED BY	J. DOLD 12/2025
CHECKED BY	J. CEREOK 12/2025

MONTANA Department of Transportation

ROAD PLANS

9/15/2025 12:54 PM

10538000RDDET002.DWG

Docusign Envelope ID: A9A0746E-7614-8538-8284-8D9BDCE64452

AWARD COPY

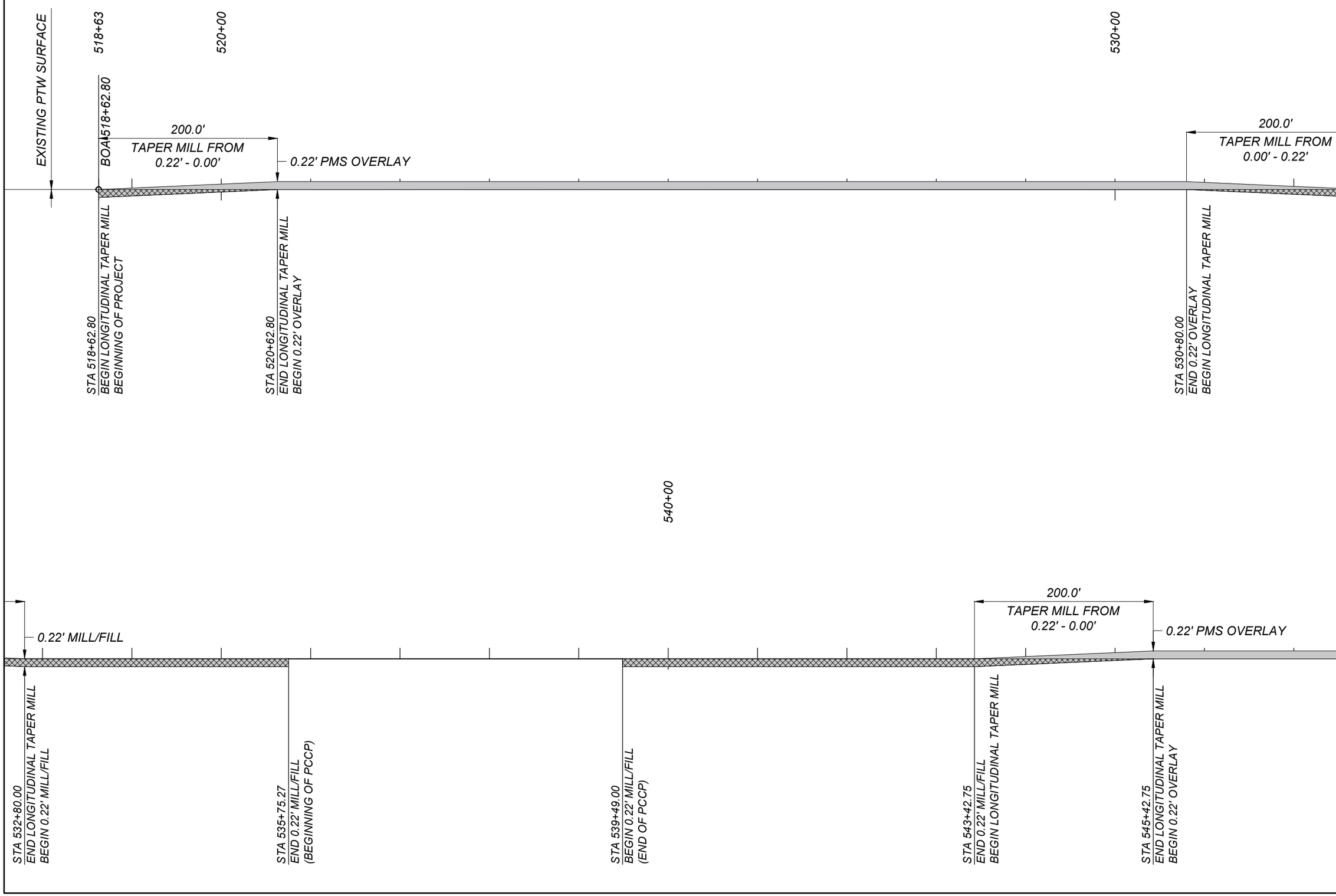

SHEET NO.
22

LONGITUDINAL TAPER MILL, MILL/FILL, & OVERLAY PROFILE VIEW DETAIL

PROJECT NAME: FLORENCE - EAST
COUNTY: RAVALLI
PROJECT ID: STPS 203-1(28)10
UPN: 10538000

DESIGNED BY: L. HARK 09/2025
REVIEWED BY: J. DOLD 12/2025
CHECKED BY: J. CEREOK 12/2025

10538000RDDET004.DWG

MONTANA Department of Transportation

ROAD PLANS

3/2/2026 10:17 AM

Docusign Envelope ID: A9A0746E-7614-8538-8284-8D9BDCE64452

AWARD COPY

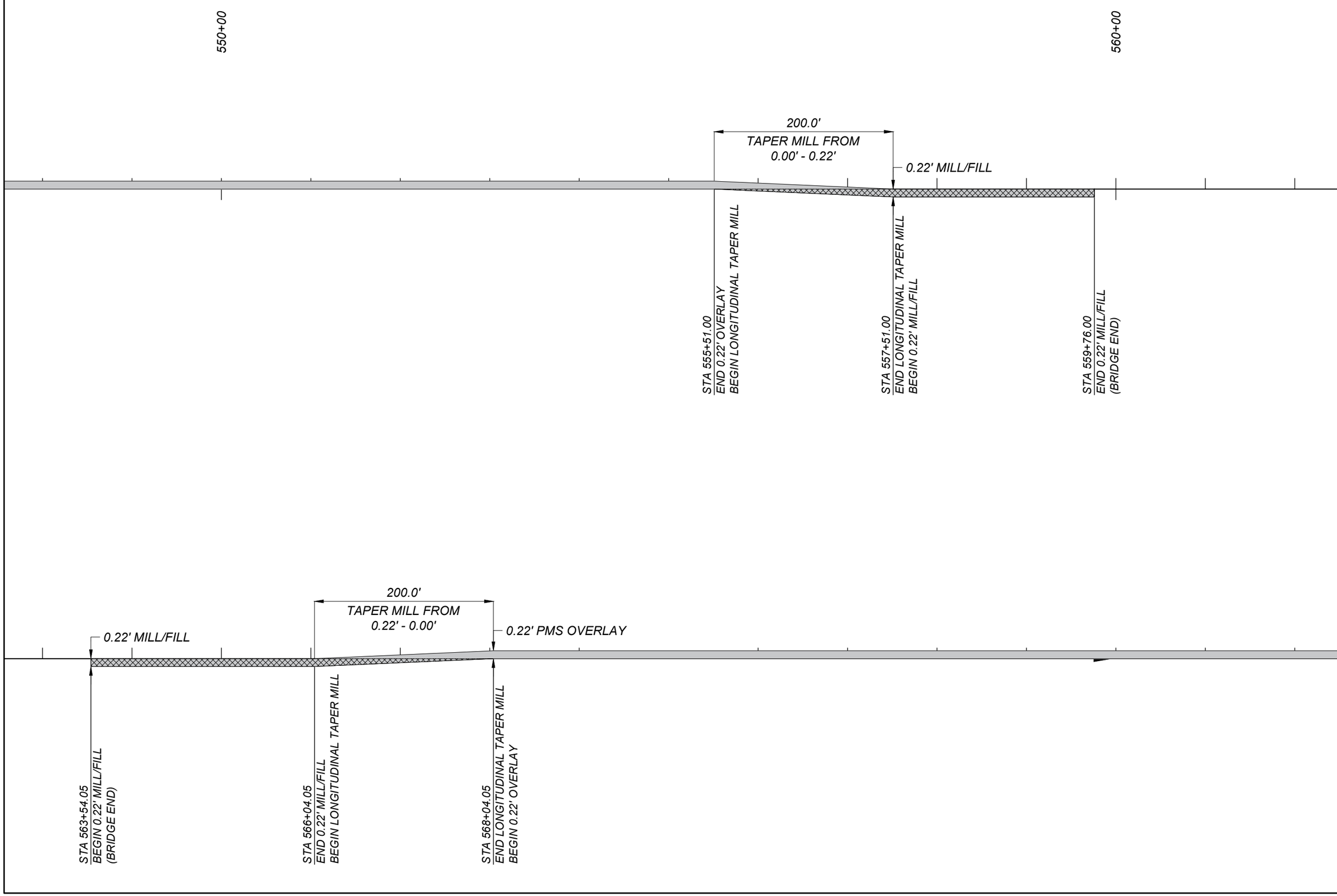

SHEET NO.
23

LONGITUDINAL TAPER MILL, MILL/FILL, & OVERLAY PROFILE VIEW DETAIL

PROJECT NAME: FLORENCE - EAST
COUNTY: RAVALLI
PROJECT ID: STPS 203-1(28)10
UPN: 10538000

DESIGNED BY: L. HARK 09/2025
REVIEWED BY: J. DOLD 12/2025
CHECKED BY: J. CERECK 12/2025

10538000RDDET004.DWG

MONTANA
Department of Transportation

ROAD PLANS

3/2/2026 10:17 AM

Docusign Envelope ID: A9A0746E-7614-8538-8284-8D9BDCE64452

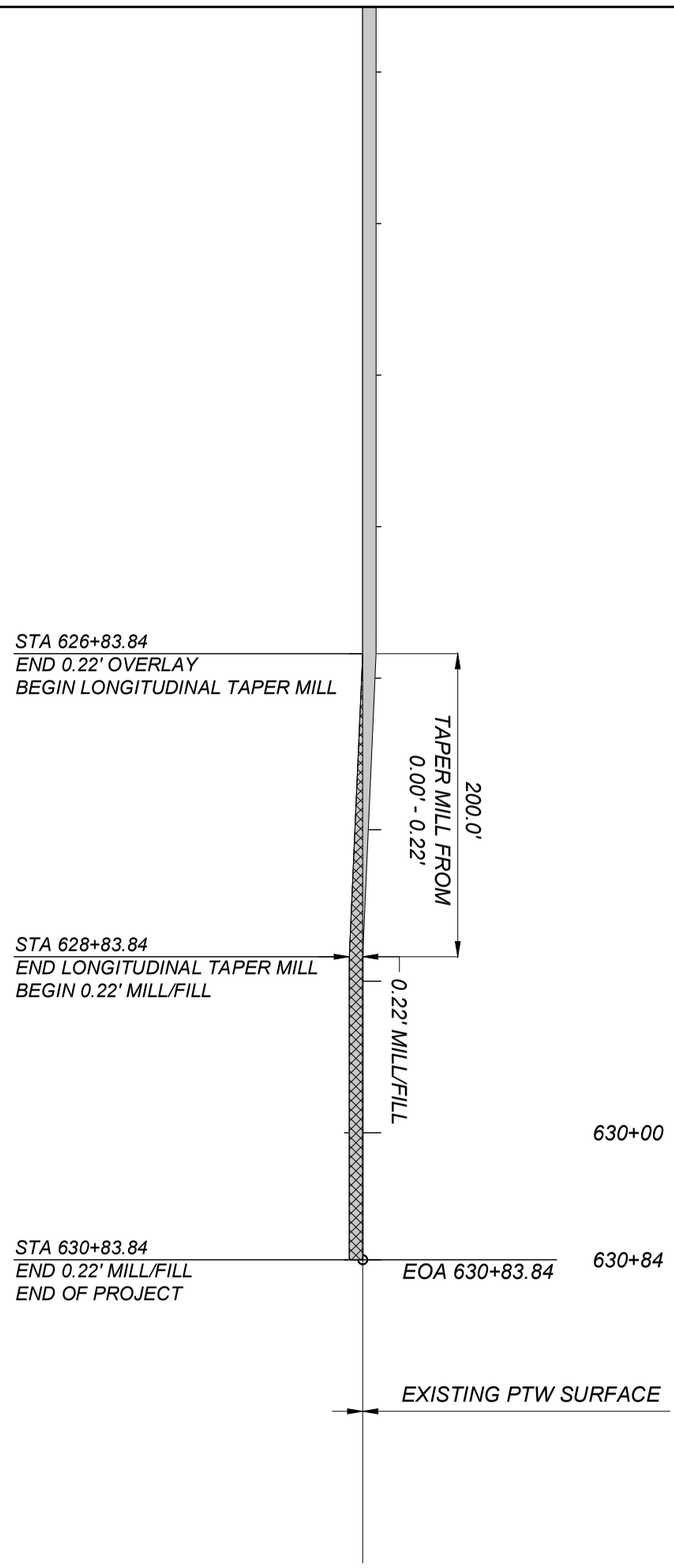

AWARD COPY

MONTANA Department of Transportation	DESIGNED BY L. HARK 09/2025	PROJECT NAME FLORENCE - EAST	LONGITUDINAL TAPER MILL, MILL/FILL, & OVERLAY PROFILE VIEW DETAIL
ROAD PLANS	REVIEWED BY J. DOLD 12/2025	COUNTY RAVALLI	SHEET NO. 24
3/2/2026 10:17 AM	CHECKED BY J. CERECK 12/2025	PROJECT ID STPS 203-1(28)10	
10538000RDDET004.DWG		UPN 10538000	

Docusign Envelope ID: A9A0746E-7614-8538-8284-8D9BDCE64452

AWARD COPY

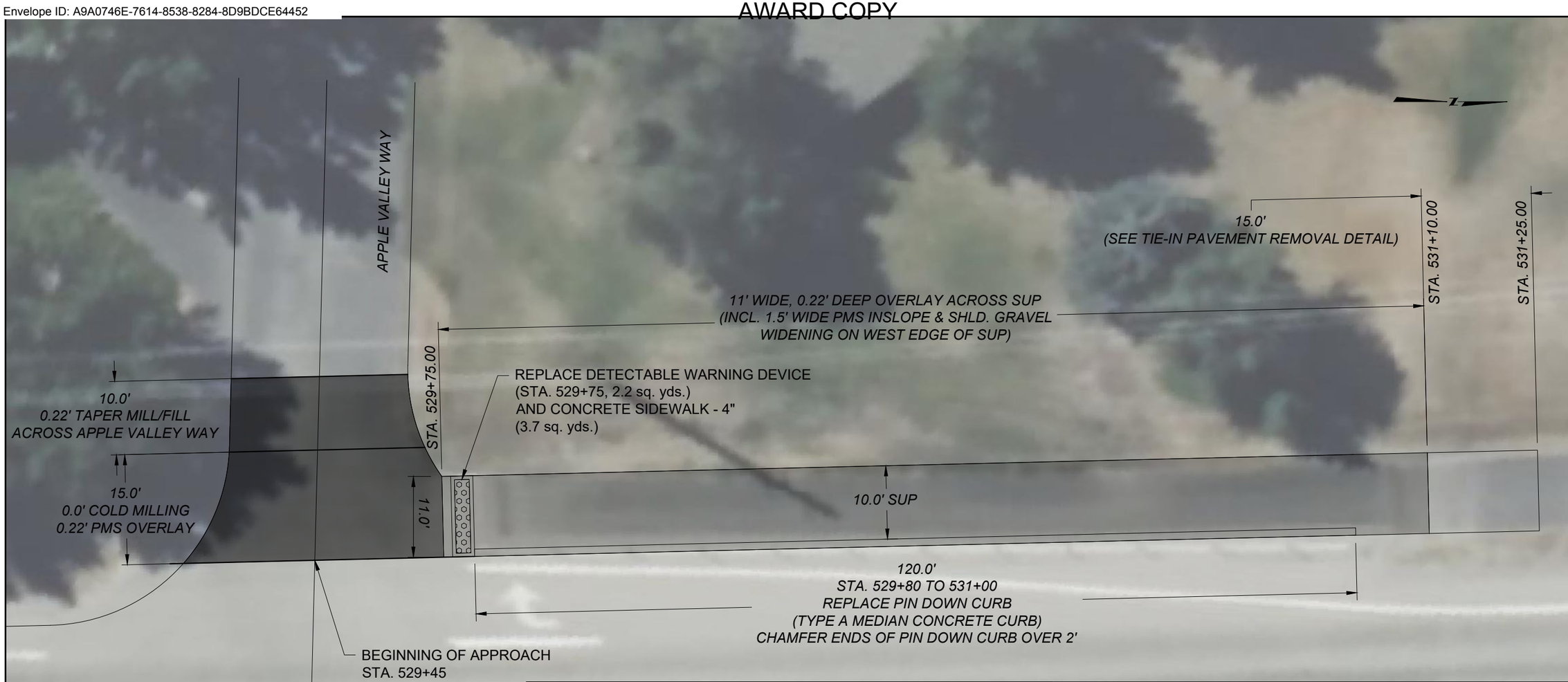

TIE-IN PAVEMENT REMOVAL DETAIL
NO SCALE

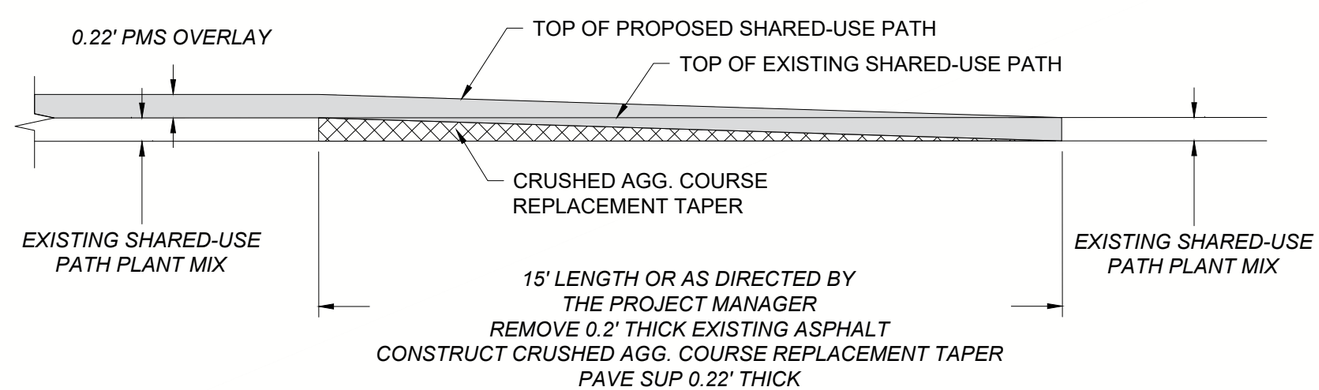

NOTE:
REMOVE THE EXISTING PLANT MIX ON THE SHARED-USE PATH FULL WIDTH TO ACCEPT NEW PMS OVERLAY.
THE LOCATIONS FOR THE PLANT MIX REMOVAL AND CAC REPLACEMENT ARE PROVIDED.
THE FINAL LOCATION OF THE TIE-IN PLANT MIX REMOVAL WILL BE DIRECTED BY THE EPM.

SHEET NO.
25

APPLE VALLEY WAY & SHARED-USE PATH (SUP) OVERLAY & CONNECTION DETAIL

PROJECT NAME: FLORENCE - EAST
COUNTY: RAVALLI
PROJECT ID: STPS 203-1(28)10
UPN: 10538000

DESIGNED BY: L. HARK 09/2025
REVIEWED BY: J. DOLD 12/2025
CHECKED BY: J. CERECK 12/2025

MONTANA Department of Transportation
ROAD PLANS

10538000RDDET005.DWG
3/2/2026 10:17 AM

Docusign Envelope ID: A9A0746E-7614-8538-8284-8D9BDCE64452

AWARD COPY

NOTE: REPLACE CONCRETE CURB AND GUTTER WITH FULL HEIGHT CURBING, AND TAPER THE CURB HEIGHT DOWN AT BOTH ENDS TO MATCH EXISTING CURB AND GUTTER CONFIGURATIONS.
MATCH EXISTING LOCATION AND ELEVATIONS FOR SIDEWALK REPLACEMENTS.

SHEET NO.
26

SIDEWALK DETAIL

PROJECT NAME: FLORENCE - EAST
COUNTY: RAVALLI
PROJECT ID: STPS 203-1(28)10
UPN: 10538000

DESIGNED BY: F. COBARRUBIAS 10/2025
REVIEWED BY: J. DOLD 12/2025
CHECKED BY: J. CERECK 12/2025

MONTANA Department of Transportation
ROAD PLANS
10538000RDDET007.DWG
10/30/2025 2:00 PM

Docusign Envelope ID: A9A0746E-7614-8538-8284-8D9BDCE64452

AWARD COPY

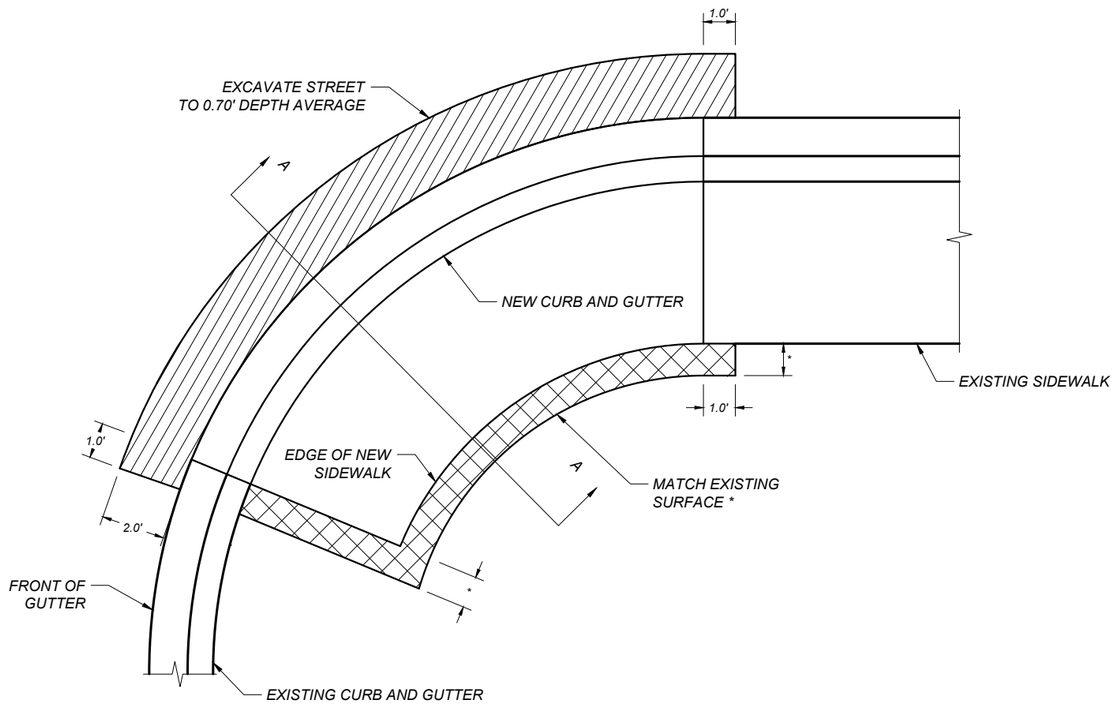

MAXIMUM CONSTRUCTION LIMITS FOR REMOVAL OF EXISTING CURB AND GUTTER AND PLACEMENT OF FORMS FOR NEW CURB AND GUTTER.

MAXIMUM CONSTRUCTION LIMITS FOR REMOVAL OF EXISTING GRASS/LANDSCAPING AND PLACEMENT OF FORMS FOR NEW SIDEWALK.

* NOTE: REPLACE SURFACING BEHIND NEW SIDEWALK TO MATCH EXISTING SURFACING, INCLUDING BUT NOT LIMITED TO:
GRASS, LANDSCAPING, ASPHALT, CONCRETE, GRAVEL, ETC.

WHEN ADJACENT TO GRASS ONLY REMOVE TO A WIDTH OF 1.0' AND REPLACE WITH SOD. WHEN ADJACENT TO LANDSCAPING REPLACE WITH EQUIVALENT AS INSTRUCTED BY PROJECT MANAGER.

NOTE: ITEMS ARE NOT MEASURED FOR PAYMENT AND INCLUDED IN THE COST OF NEW SIDEWALK OR CURB AND GUTTER.

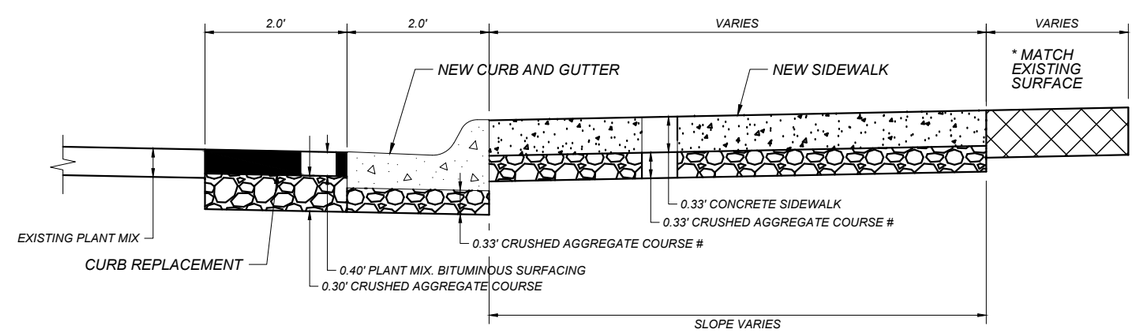

SECTION A-A

SHEET NO.
27

CURB REPLACEMENT DETAIL

PROJECT NAME: FLORENCE - EAST
COUNTY: RAVALLI
PROJECT ID: STPS 203-1(28)10
UPN: 10538000

DESIGNED BY: F. COBARRUBIAS 11/2025
REVIEWED BY: J. DOLD 12/2025
CHECKED BY: J. CERECK 12/2025

MONTANA Department of Transportation
ROAD PLANS

10538000RDDET008.DWG
11/07/2025 10:51 AM

Docusign Envelope ID: A9A0746E-7614-8538-8284-8D9BDCE64452

AWARD COPY

NOTES AND ABBREVIATIONS:

MOUNTING HEIGHT REQUIREMENTS: MOUNTING HEIGHTS SHOWN REFER TO THE BOTTOM OF THE MAJOR PANEL. SEE DETAILED DRAWINGS 619-00 & 619-08

SEE LOCATION AND SPECIFICATION SHEETS FOR PORTIONS OF PROJECT NOT INCLUDED WITHIN SIGNING PLAN SHEETS.

SIGNING AND PAVEMENT MARKING LOCATIONS ARE APPROXIMATE. PROJECT MANAGER TO FIELD ADJUST AS NECESSARY.

ADOPT A HIGHWAY: IF SIGNS N7-1/N7-1P EXIST, CONTRACTOR WILL CONFIRM THAT THE GROUP NAME ON THE SIGN(S) EXISTING AT THE TIME OF CONSTRUCTION CORRESPONDS TO THE GROUP NAME ON THE SIGN(S) SHOWN IN PLANS. IF NAME IS DIFFERENT, PROJECT MANAGER WILL CONTACT TRAFFIC & SAFETY BUREAU SIGNING SECTION WITH THE CORRECT NAME AND A NEW SIGN DESIGN WILL BE PROVIDED.

HORIZONTAL ALIGNMENT: THE ALIGNMENT SHOWN IN THE PLANS IS NOT A RE-CREATION OF THE AS-BUILT ALIGNMENT AND DOES NOT SUPERSEDE THE EXISTING. THE INTENT OF THE SHOWN ALIGNMENT IS TO ASSIST IN LAYING OUT SIGNING ELEMENTS.

RSFO = REPLACE SIGN FACE ONLY

FY = FLUORESCENT YELLOW SHEETING REQUIRED

MBB = MOUNT BACK TO BACK

✕ = STANDARD BREAKAWAY DEVICE:
- FOR WOOD POST SEE DETAILED DRAWING 619-20.
- FOR STRUCTURAL STEEL SEE DETAILED DRAWING 619-13.

▲ = SINGLE SQUARE TUBE REQUIRED. MOUNTED IN HEAVY DUTY STUB.

★ = TELESCOPED SQUARE TUBES (2-1/4" & 2-1/2") WITH SLIP BASE BREAKAWAY REQUIRED. MOUNTED IN HEAVY DUTY STUB.

BGR = BEHIND GUARDRAIL

SUP = SHARED USE PATH

BBR = BACKBRACING REQUIRED:
- FOR WOOD POLE SEE DET. DWG 619-22
- FOR STEEL POST 2" X 2" X 1/4" REQUIRED. SEE DET. DWG 619-16
- FOR STRUCTURAL STEEL POST 2 3/4" X 2 3/8" EXTRUDED "T" SECTION BACKBRACE REQUIRED. SEE DET. DWG 619-19
- FOR CANTILEVER POST, SEE DET. DWG 619-18
- FOR GUIDE SIGN PANELS, USE EXTRUDED "T" SECTION BACKBRACE. SEE DET. DWG 619-04

USE HARDWARE MEETING REQUIREMENTS OF SECTION 704

SUMMARY
SIGNING & DELINEATION QUANTITIES

MATERIAL	TOTAL	UNIT
SIGNS-ALUM REFL SHEET XI	588.1	SQFT
SIGNS-ALUM SHEET INCR XI	32.0	SQFT
REMOVE SIGN	73	EACH
REMOVE SIGN-GUIDE	2	EACH
POSTS-STEEL U SIGN	40	LB
POSTS-TUBULAR STEEL-SQ-PERF	560	LB
POLES-TREATED WOOD 4 IN	37	EACH
POLES-TREATED WOOD 5 IN	6	EACH
POLES-TREATED WOOD 6 IN	1	EACH
SQ TUBLR SLIP BASE BKWY-3 IN (76MM)	3	EACH
DELINEATOR TYPE 1	149	EACH
DELINEATOR TYPE 2	8	EACH
DELINEATOR-FLEX SURF MTD WH	23	EACH
DELINEATOR-FLEX SURF MTD YLW	11	EACH

DELINEATION SUMMARY		
SYMBOL	DESIGN	TOTAL
	A	106
	C	8
	D	26
	F	17
	White FLEX SURF MTD	23
	Yellow FLEX SURF MTD	11

SHEET NO.
S1

SIGNING NOTES AND SUMMARY FRAMES

PROJECT NAME: FLORENCE - EAST
COUNTY: RAVALLI
PROJECT ID: STPS 203-1(28)10
UPN: 10538000

DESIGNED BY: L MOREY 7/2025
REVIEWED BY: N THOLT 8/2025
CHECKED BY: N STYREN 8/2025

MONTANA Department of Transportation

SIGNING PLANS

10538000SIGSUM001.DWG

2/9/2026 3:59 PM

Docusign Envelope ID: A9A0746E-7614-8538-8284-8D9BDCE64452

AWARD COPY

SIGN LOCATION			PANEL SPECIFICATIONS					SIGN ASSEMBLY SPECIFICATIONS											SIGN ASSEMBLY QUANTITIES													ADDITIONAL INFORMATION	
								FEET		FEET									PANEL (SQ. FT.)		WOOD POLE (LNR. FT.)	STEEL POST (LBS.)							REMOVE		RESET			
STATION / R.P.	LFT / MDN / RGT / OH	ACTION	SIGN NO. (MUTCD / MT)	PANEL SIZE (INCHES) W X H	FY OR FYG	BACKBRACING REQ'D / 1 OR 2 ANGLE IRONS REQ'D	MOUNT BACK TO BACK / CHEVRON ANGLE MOUNT	CLEARANCE / OFFSET (SHOULDER TO EDGE OF SIGN)	TYPE OF SUPPORT	SUPPORT SPACING	MOUNTING HEIGHT	FOUNDATION DEPTH	SUPPORT LENGTH (ESTIMATED) X	Y	Z	CANTILEVER	BREAKAWAY TYPE	BEHIND GUARDRAIL	SHEET ALUMINUM	SHEET ALUMINUM INCREMENT	4" TOP DIA.	5" TOP DIA.	6" TOP DIA.	ROUND TUBULAR	SQUARE TUBULAR	STRUCTURAL STEEL	"U" POST	# OF BREAKAWAYS	SIGN	GUIDE	SIGN	GUIDE	SIGN IMAGE	REMARKS
13+85	L	USE AS IS	D3-1 (Huck) (2x)																														
			R1-1																														
16+10	L	NEW	W11-1	30 X 30				10.0	4" Treated Wood Pole		5.1	3.0	12.7						6.3		14												
			W16-1P	18 X 12															1.5														
17+70	R	USE AS IS	R3-9j																														
17+70	L	USE AS IS	R3-9k																														
21+45	L	REPLACE	R2-1 (60)	24 X 30				10.0	4" Treated Wood Pole		5.0	3.0	12.3						5.0		14							1					
22+45	L	REPLACE	D3-2 (Apple) (2x)	30 X 24				6.0	4" Treated Wood Pole		5.0	3.0	13.8						10.0		14							1					
			R1-1	30 X 30															5.2														
24+90	R	REPLACE	W2-6	30 X 30	FY			2.0 outside SUP	4" Treated Wood Pole		6.6	3.0	11.6						6.3		12							1					
			W16-8P (8 Mile)	30 X 18	FY														3.8														
26+70	R	RSFO	R3-9k	24 X 42															7.0									1					
26+70	L	RSFO	R3-9j	24 X 42															7.0									1					

SHEET NO.
S2

SIGN LOCATIONS AND SPECIFICATIONS

PROJECT NAME: FLORENCE - EAST
COUNTY: RAVALLI
PROJECT ID: STPS 203-1(28)10
UPN: 10538000

DESIGNED BY: L MOREY 7/2025
REVIEWED BY: N THOLT 8/2025
CHECKED BY: N STYREN 8/2025

MONTANA Department of Transportation

SIGNING PLANS

10538000SIGNM001.DWG

2/9/2026 3:59 PM

Docusign Envelope ID: A9A0746E-7614-8538-8284-8D9BDCE64452

AWARD COPY

SIGN LOCATION			PANEL SPECIFICATIONS					SIGN ASSEMBLY SPECIFICATIONS										SIGN ASSEMBLY QUANTITIES													ADDITIONAL INFORMATION	
								FEET		FEET								PANEL (SQ. FT.)		WOOD POLE (LNR. FT.)			STEEL POST (LBS.)					REMOVE		RESET			
STATION / R.P.	LFT / MDN / RGT / OH	ACTION	SIGN NO. (MUTCD / MT)	PANEL SIZE (INCHES) W X H	FY OR FYG	BACKBRACING REQ'D / 1 OR 2 ANGLE IRONS REQ'D	MOUNT BACK TO BACK / CHEVRON ANGLE MOUNT	CLEARANCE / OFFSET (SHOULDER TO EDGE OF SIGN)	TYPE OF SUPPORT	SUPPORT SPACING	MOUNTING HEIGHT	FOUNDATION DEPTH	SUPPORT LENGTH (ESTIMATED) X	Y	Z	CANTILEVER	BREAKAWAY TYPE	BEHIND GUARDRAIL	SHEET ALUMINUM	SHEET ALUMINUM INCREMENT	4" TOP DIA.	5" TOP DIA.	6" TOP DIA.	ROUND TUBULAR	SQUARE TUBULAR	STRUCTURAL STEEL	"U" POST	# OF BREAKAWAYS	SIGN	GUIDE	SIGN	GUIDE	SIGN IMAGE	REMARKS
27+65	R	REPLACE	D3-2 (Hidden) (2x)	30 X 24			MBB	6.0	4" Treated Wood Pole		5.0	3.0	13.8						10.0		14								1				Hidden Valley Rd	
			R1-1	30 X 30															5.2														STOP	
27+65	L	REPLACE	D3-2 (Apple) (2x)	30 X 24			MBB	6.0	4" Treated Wood Pole		5.0	3.0	13.8						10.0		14								1				Apple Valley Way	
			R1-1	30 X 30															5.2														STOP	
33+45	L	REPLACE	M3-3P	24 X 12				10.0	4" Treated Wood Pole		5.0	3.0	12.9						2.0		14								1				SOUTH	
			M1-12 (203)	24 X 24															4.0														203	
34+30	L	RSFO	W4-2R	36 X 36															9.0										1					
34+92	M	REPLACE	D3-1 (Eastside) (2x)	36 X 12			MBB	2.0	2.0" Tubular Stl-Square		7.0	3.0	12.1				▲		6.0					48					1				Eastside Hwy	
			R1-2	36 X 36															3.9														YIELD	
34+97	M	REPLACE	M3-3P	24 X 12				2.0	2.25" 2.5" Tubular Stl-Square		7.0	3.0	11.4				★		2.0					97			1		1				SOUTH	
			M1-12 (203)	24 X 24															4.0														203	
			M6-2R	21 X 15															2.2															
34+98	R	RSFO	R1-2	36 X 36															3.9										1				YIELD	
35+50	M	REPLACE	R6-1R	48 X 18				2.0	2.0" Tubular Stl-Square		7.0	3.0	10.0				▲		6.0					43					1				ONE WAY	REMOVE R6-4, NEW R6-1R

SHEET NO.
S3

SIGN LOCATIONS AND SPECIFICATIONS

PROJECT NAME: FLORENCE - EAST
COUNTY: RAVALLI
PROJECT ID: STPS 203-1(28)10
UPN: 10538000

DESIGNED BY: L MOREY 7/2025
REVIEWED BY: N THOLT 8/2025
CHECKED BY: N STYREN 8/2025

MONTANA Department of Transportation

SIGNING PLANS

2/9/2026 3:59 PM

10538000SIJUM001.DWG

Docusign Envelope ID: A9A0746E-7614-8538-8284-8D9BDCE64452

AWARD COPY

SIGN LOCATION			PANEL SPECIFICATIONS					SIGN ASSEMBLY SPECIFICATIONS										SIGN ASSEMBLY QUANTITIES													ADDITIONAL INFORMATION	
								FEET		FEET								PANEL (SQ. FT.)		WOOD POLE (LNR. FT.)			STEEL POST (LBS.)					REMOVE		RESET			
STATION / R.P.	LFT / MDN / RGT / OH	ACTION	SIGN NO. (MUTCD / MT)	PANEL SIZE (INCHES) W X H	FY OR FYG	BACKBRACING REQ'D / 1 OR 2 ANGLE IRONS REQ'D	MOUNT BACK TO BACK / CHEVRON ANGLE MOUNT	CLEARANCE / OFFSET (SHOULDER TO EDGE OF SIGN)	TYPE OF SUPPORT	SUPPORT SPACING	MOUNTING HEIGHT	FOUNDATION DEPTH	SUPPORT LENGTH (ESTIMATED) X	Y	Z	CANTILEVER	BREAKAWAY TYPE	BEHIND GUARDRAIL	SHEET ALUMINUM	SHEET ALUMINUM INCREMENT	4" TOP DIA.	5" TOP DIA.	6" TOP DIA.	ROUND TUBULAR	SQUARE TUBULAR	STRUCTURAL STEEL	"U" POST	# OF BREAKAWAYS	SIGN	GUIDE	SIGN	GUIDE	SIGN IMAGE	REMARKS
35+95	M	REPLACE	R6-1R	48 X 18				2.0	2.0" Tubular Stl-Square		7.0	3.0	10.0				▲		6.0						43				1					REMOVE R6-4, NEW R6-1R
35+95	M	REPLACE	R6-1R	48 X 18				2.0	2.0" Tubular Stl-Square		7.0	3.0	10.0				▲		6.0						43				1					REMOVE R6-4, NEW R6-1R
36+58	M	REPLACE	M3-1P	24 X 12				2.0	2.25" 2.5" Tubular Stl-Square		7.0	3.0	11.4				★		2.0						97			1	1					
			M1-12 (203)	24 X 24															4.0															
			M6-2R	21 X 15															2.2															
36+60	M	REPLACE	D3-1 (Eastside) (2x)	36 X 12			MBB	2.0	2.0" Tubular Stl-Square		7.0	3.0	12.1				▲		6.0						48				1					
			R1-2	36 X 36															3.9															
36+60	M	RSFO	R1-2	36 X 36															3.9										1					
38+00	R	REPLACE	M3-1P	24 X 12				10.0	4" Treated Wood Pole		5.0	3.0	12.9						2.0		14								1					
			M1-12 (203)	24 X 24															4.0															
39+10	L	RSFO	R3-8.5	48 X 48															16.0										1					
40+40	R	REPLACE	W4-2R	36 X 36				10.0	4" Treated Wood Pole		5.0	3.0	14.1						9.0		16								1					
41+70	R	RSFO	R3-9j	24 X 42															7.0										1					
42+45	L	RSFO	R3-9k	24 X 42															7.0										1					

SHEET NO.
S4

SIGN LOCATIONS AND SPECIFICATIONS

PROJECT NAME: FLORENCE - EAST
COUNTY: RAVALLI
PROJECT ID: STPS 203-1(28)10
UPN: 10538000

DESIGNED BY: L MOREY 7/2025
REVIEWED BY: N THOLT 8/2025
CHECKED BY: N STYREN 8/2025

MONTANA Department of Transportation

SIGNING PLANS

10538000SIUM001.DWG

2/9/2026 3:59 PM

Docusign Envelope ID: A9A0746E-7614-8538-8284-8D9BDCE64452

AWARD COPY

SIGN LOCATION			PANEL SPECIFICATIONS					SIGN ASSEMBLY SPECIFICATIONS											SIGN ASSEMBLY QUANTITIES													ADDITIONAL INFORMATION	
								FEET		FEET									PANEL (SQ. FT.)		WOOD POLE (LNR. FT.)			STEEL POST (LBS.)					REMOVE		RESET			
STATION / R.P.	LFT / MDN / RGT / OH	ACTION	SIGN NO. (MUTCD / MT)	PANEL SIZE (INCHES) W X H	FY OR FYG	BACKBRACING REQ'D / 1 OR 2 ANGLE IRONS REQ'D	MOUNT BACK TO BACK / CHEVRON ANGLE MOUNT	CLEARANCE / OFFSET (SHOULDER TO EDGE OF SIGN)	TYPE OF SUPPORT	SUPPORT SPACING	MOUNTING HEIGHT	FOUNDATION DEPTH	SUPPORT LENGTH (ESTIMATED) X	Y	Z	CANTILEVER	BREAKAWAY TYPE	BEHIND GUARDRAIL	SHEET ALUMINUM	SHEET ALUMINUM INCREMENT	4" TOP DIA.	5" TOP DIA.	6" TOP DIA.	ROUND TUBULAR	SQUARE TUBULAR	STRUCTURAL STEEL	"U" POST	# OF BREAKAWAYS	SIGN	GUIDE	SIGN	GUIDE	SIGN IMAGE	REMARKS
45+50	L	REPLACE	W2-6	30 X 30	FY			10.0	4" Treated Wood Pole		5.6	3.0	13.9						6.3		14								1					
			W16-8P (8 Mile)	30 X 18	FY														3.8															
46+75	L	REPLACE	D3-1 (New Farm) (2x)	42 X 12			MBB	6.0	4" Treated Wood Pole		5.0	3.0	10.3						7.0		12								1					
48+00	R	REPLACE	R2-1 (60)	24 X 30				10.0	4" Treated Wood Pole		5.0	3.0	12.3						5.0		14								1					
53+30	R	REPLACE	FAP-1	48 X 48		BBR		20.0	5" Treated Wood Pole	2.4	5.1	3.5	16.1	16.5			X		16.0			36								1				REMOVE former FWP fishing access signs (shown on plan sheets)
			FAP-1P	48 X 12															4.0															
56+15	L	RSFO	R3-9j	24 X 42														BGR	7.0										1					
56+15	R	RSFO	R3-9k	24 X 42															7.0										1					
58+10	R	REPLACE	D10-2 (11) (2x)	10 X 27			MBB	4.0	2.0lb Steel U Post		4.0	3.0	10.0					BGR	3.8							20			1					
58+20	R	REPLACE	I2-2 (Bitterroot)	30 X 18				5.0	4" Treated Wood Pole		5.0	3.0	12.6					BGR	3.8		14								1					
62+10	L	REPLACE	I2-2 (Bitterroot)	30 X 18				2.0 outside SUP	4" Treated Wood Pole		7.0	3.0	13.5					BGR	3.8		14								1					
67+55	SUP	REPLACE	D11-10aL D11-10aR	18 X 6			MBB	2.0 outside SUP	4" Treated Wood Pole		4.0	3.0	8.0						1.5		8								1					Sign for SUP along fishing access road, see map for location
68+25	L	REPLACE	R1-1	30 X 30				6.0	4" Treated Wood Pole		5.0	3.0	11.0						5.2		12								1					
68+50	R	REPLACE	FAP-1 (2x)	48 X 48		BBR	MBB	20.0	5" Treated Wood Pole	2.4	5.8	3.5	16.8	17.2			X		32.0			36								1				REMOVE former FWP fishing access signs (shown on plan sheets)
			M6-1PL M6-1PR	30 X 21			MBB												8.8															Mount on post closest to road
68+75	L	REPLACE	D11-10aL D11-10aR	18 X 6			MBB	10.0	4" Treated Wood Pole		4.0	3.0	9.3						1.5		10								1					Sign for SUP approach to fishing access road, see map for location
69+10	R	RSFO	R3-9j	24 X 42															7.0										1					
69+10	L	RSFO	R3-9k	24 X 42															7.0										1					
80+40	L	REPLACE	FAP-1	48 X 48		BBR		5.0	6" Treated Wood Pole		5.1	4.5	14.8					BGR	16.0				16						1					REMOVE former FWP fishing access signs (shown on plan sheets)
			FAP-1P	48 X 12															4.0															

SHEET NO.
S5

SIGN LOCATIONS AND SPECIFICATIONS

PROJECT NAME: FLORENCE - EAST
COUNTY: RAVALLI
PROJECT ID: STPS 203-1(28)10
UPN: 105380000

DESIGNED BY: L MOREY 7/2025
REVIEWED BY: N THOLT 8/2025
CHECKED BY: N STYREN 8/2025

MONTANA Department of Transportation

SIGNING PLANS

2/9/2026 3:59 PM

105380000SISUM001.DWG

Docusign Envelope ID: A9A0746E-7614-8538-8284-8D9BDCE64452

AWARD COPY

SIGN LOCATION			PANEL SPECIFICATIONS					SIGN ASSEMBLY SPECIFICATIONS										SIGN ASSEMBLY QUANTITIES												ADDITIONAL INFORMATION	
								FEET			FEET							PANEL (SQ. FT.)		WOOD POLE (LNR. FT.)			STEEL POST (LBS.)					REMOVE		RESET			
STATION / R.P.	LFT / MDN / RGT / OH	ACTION	SIGN NO. (MUTCD / MT)	PANEL SIZE (INCHES) W X H	FY OR FYG	BACKBRACING REQ'D / 1 OR 2 ANGLE IRONS REQ'D	MOUNT BACK TO BACK / CHEVRON ANGLE MOUNT	CLEARANCE / OFFSET (SHOULDER TO EDGE OF SIGN)	TYPE OF SUPPORT	SUPPORT SPACING	MOUNTING HEIGHT	FOUNDATION DEPTH	SUPPORT LENGTH (ESTIMATED) X	Y	Z	CANTILEVER	BREAKAWAY TYPE	BEHIND GUARDRAIL	SHEET ALUMINUM	SHEET ALUMINUM INCREMENT	4" TOP DIA.	5" TOP DIA.	6" TOP DIA.	ROUND TUBULAR	SQUARE TUBULAR	STRUCTURAL STEEL	"U" POST	# OF BREAKAWAYS	SIGN	GUIDE	SIGN	GUIDE	SIGN IMAGE	REMARKS
83+65	R	REPLACE	D3-1 (Klements) (2x)	36 X 12			MBB	2.0	4" Treated Wood Pole		5.0	3.0	12.2					BGR	6.0		14								1					
			R1-1	30 X 30															5.2															
98+25	L	REPLACE	R5-3	24 X 24				2.0 outside SUP	4" Treated Wood Pole		4.0	3.0	9.5						4.0		10								1					
98+55	L	REPLACE	D3-1 (Ross) (2x)	24 X 12			MBB	6.0	4" Treated Wood Pole		5.0	3.0	10.2						4.0		12								1					
99+15	L	REPLACE	R5-3	24 X 24				2.0 outside SUP	4" Treated Wood Pole		4.0	3.0	9.5						4.0		10								1					
110+90	R	NEW	D10-2 (12) (2X)	10 X 27			MBB	4.0	2.0lb Steel U Post		4.0	3.0	10.0						3.8								20							
118+50	R	REPLACE	D3-1 (Schrage) (2x)	36 X 12			MBB	6.0	4" Treated Wood Pole		5.0	3.0	12.8						6.0		14								1					
			R1-1	30 X 30															5.2															
119+40	L	REPLACE	R2-1 (60)	24 X 30				2.0 outside SUP	4" Treated Wood Pole		7.0	3.0	13.0						5.0		14								1					
120+40	R	RSFO	R3-9k	24 X 42															7.0										1					
120+90	L	REPLACE	R3-9j	24 X 42				2.0 outside SUP	4" Treated Wood Pole		7.0	3.0	14.0						7.0		14								1					
121+25	L	REPLACE	R5-3	24 X 24				2.0 outside SUP	4" Treated Wood Pole		4.0	3.0	9.5						4.0		10								1					
121+35	L	REPLACE	W14-2aL W14-2aR	36 X 9			MBB	6.0	4" Treated Wood Pole		7.0	3.0	15.7						4.5		16								1					
			D3-1 (Wildlife) (2x)	36 X 12			MBB												6.0															
			R1-1	30 X 30															5.2															
121+90	L	REPLACE	R5-3	24 X 24				2.0 outside SUP	4" Treated Wood Pole		4.0	3.0	9.5						4.0		10								1					

SHEET NO.
S6

SIGN LOCATIONS AND SPECIFICATIONS

PROJECT NAME: FLORENCE - EAST
COUNTY: RAVALLI
PROJECT ID: STPS 203-1(28)10
UPN: 10538000

DESIGNED BY: L MOREY 7/2025
REVIEWED BY: N THOLT 8/2025
CHECKED BY: N STYREN 8/2025

10538000SIUM001.DWG

MONTANA Department of Transportation

SIGNING PLANS

2/9/2026 3:59 PM

Docusign Envelope ID: A9A0746E-7614-8538-8284-8D9BDCE64452

AWARD COPY

SIGN LOCATION			PANEL SPECIFICATIONS					SIGN ASSEMBLY SPECIFICATIONS										SIGN ASSEMBLY QUANTITIES													ADDITIONAL INFORMATION	
								FEET		FEET								PANEL (SQ. FT.)		WOOD POLE (LNR. FT.)			STEEL POST (LBS.)					REMOVE		RESET			
STATION / R.P.	LFT / MDN / RGT / OH	ACTION	SIGN NO. (MUTCD / MT)	PANEL SIZE (INCHES) W X H	FY OR FYG	BACKBRACING REQ'D / 1 OR 2 ANGLE IRONS REQ'D	MOUNT BACK TO BACK / CHEVRON ANGLE MOUNT	CLEARANCE / OFFSET (SHOULDER TO EDGE OF SIGN)	TYPE OF SUPPORT	SUPPORT SPACING	MOUNTING HEIGHT	FOUNDATION DEPTH	SUPPORT LENGTH (ESTIMATED) X	Y	Z	CANTILEVER	BREAKAWAY TYPE	BEHIND GUARDRAIL	SHEET ALUMINUM	SHEET ALUMINUM INCREMENT	4" TOP DIA.	5" TOP DIA.	6" TOP DIA.	ROUND TUBULAR	SQUARE TUBULAR	STRUCTURAL STEEL	"U" POST	# OF BREAKAWAYS	SIGN	GUIDE	SIGN	GUIDE	SIGN IMAGE	REMARKS
122+10	L	REMOVE SIGN	W14-2aR																										1				NO OUTLET	
122+15	R	REPLACE	D3-1 (Eagle) (2x)	30 X 12			MBB	6.0	4" Treated Wood Pole		5.0	3.0	10.2						5.0		12								1				Eagle Ct	
124+30	R	RSFO	D1-2	96 X 48																32.0									1				← Hamilton Missoula →	
124+85	R	REPLACE	W3-3	30 X 30				10.0	4" Treated Wood Pole		5.0	3.0	13.9						6.3		14								1					
125+40	R	REMOVE SIGN	W10-1																										1					Railroad crossing has been removed
125+50	R	REPLACE	R3-8c	30 X 30				10.0	4" Treated Wood Pole		5.0	3.0	12.4						6.3		14								1				ONLY	
125+75	L	REPLACE	M3-3P	24 X 12				10.0	4" Treated Wood Pole		5.0	3.0	12.9						2.0		14								1				SOUTH	
			M1-12 (203)	24 X 24															4.0														203	
127+00	L	REPLACE	R3-8b	48 X 30				10.0	5" Treated Wood Pole		5.0	3.5	13.0				X		10.0			14							1				ONLY ONLY ONLY	
127+60	R	REPLACE	D3-1 (Donnas) (2x)	30 X 12			MBB	6.0	4" Treated Wood Pole		5.0	3.0	10.2						5.0		12								1				Donnas Dr	
127+70	L	REPLACE	N7-1 MT	36 X 48				2.0 inside SUP	5" Treated Wood Pole		5.6	3.5	13.7				X		12.0			14							1				ADOPT A HIGHWAY KEEP IT GREEN KEEP IT CLEAN	No adoptee plaque at this time
128+55	R	REMOVE SIGN	R10-6																										1				STOP HERE ON RED	Railroad crossing has been removed
Eight Mile Creek Rd (NE Roundabout Approach)																																		
150+85	M	REPLACE	D3-2 (Eight) (2x)	36 X 24			MBB	2.0	2.0" Tubular Stl-Square		5.0	3.0	11.9				▲		12.0						48				1				Eight Mile Creek Rd	
			R1-2	36 X 36															3.9														YIELD	
150+85	M	RSFO	R1-2	36 X 36															3.9										1				YIELD	

SHEET NO.
S7

SIGN LOCATIONS AND SPECIFICATIONS

PROJECT NAME: FLORENCE - EAST
COUNTY: RAVALLI
PROJECT ID: STPS 203-1(28)10
UPN: 10538000

DESIGNED BY: L MOREY 7/2025
REVIEWED BY: N THOLT 8/2025
CHECKED BY: N STYREN 8/2025

MONTANA Department of Transportation
SIGNING PLANS
10538000SIUM001.DWG
2/9/2026 3:59 PM

Docusign Envelope ID: A9A0746E-7614-8538-8284-8D9BDCE64452

AWARD COPY

SIGN LOCATION			PANEL SPECIFICATIONS					SIGN ASSEMBLY SPECIFICATIONS										SIGN ASSEMBLY QUANTITIES													ADDITIONAL INFORMATION	
								FEET		FEET								PANEL (SQ. FT.)		WOOD POLE (LNR. FT.)			STEEL POST (LBS.)					REMOVE		RESET			
STATION / R.P.	LFT / MDN / RGT / OH	ACTION	SIGN NO. (MUTCD / MT)	PANEL SIZE (INCHES) W X H	FY OR FYG	BACKBRACING REQ'D / 1 OR 2 ANGLE IRONS REQ'D	MOUNT BACK TO BACK / CHEVRON ANGLE MOUNT	CLEARANCE / OFFSET (SHOULDER TO EDGE OF SIGN)	TYPE OF SUPPORT	SUPPORT SPACING	MOUNTING HEIGHT	FOUNDATION DEPTH	SUPPORT LENGTH (ESTIMATED) X	Y	Z	CANTILEVER	BREAKAWAY TYPE	BEHIND GUARDRAIL	SHEET ALUMINUM	SHEET ALUMINUM INCREMENT	4" TOP DIA.	5" TOP DIA.	6" TOP DIA.	ROUND TUBULAR	SQUARE TUBULAR	STRUCTURAL STEEL	"U" POST	# OF BREAKAWAYS	SIGN	GUIDE	SIGN	GUIDE	SIGN IMAGE	REMARKS
151+10	SUP	REPLACE	W1-6R	24 X 12				2.0 from SUP	4" Treated Wood Pole		4.0	3.0	10.7						2.0		12							1					Sign for SUP, see map for location
152+70	L	RSFO	R3-8.7	48 X 42															14.0									1					
152+95	L	RSFO	W11-2	36 X 36	FY														9.0									1					
			W16-7PL	30 X 21	FY														4.4														
153+05	R	RSFO	W11-2	36 X 36	FY														9.0									1					
			W16-7PL	30 X 21	FY														4.4														
153+55	R	REPLACE	D3-1 (Antrim) (2x)	30 X 12			MBB	6.0	4" Treated Wood Pole		5.0	3.0	12.8						5.0		14							1					
			R1-1	30 X 30															5.2														
153+75	L	REPLACE	R1-5L	36 X 36				10.0	4" Treated Wood Pole		5.0	3.0	12.9						9.0		14							1					
154+15	R	REPLACE	R2-1 (50)	24 X 30				10.0	4" Treated Wood Pole		5.0	3.0	12.3						5.0		14							1					
154+35	L	REMOVE SIGN	M1-12 (203)																									1					
			M6-4P																														

SHEET NO.
S8

SIGN LOCATIONS AND SPECIFICATIONS

PROJECT NAME: FLORENCE - EAST
COUNTY: RAVALLI
PROJECT ID: STPS 203-1(28)10
UPN: 10538000

DESIGNED BY: L MOREY 7/2025
REVIEWED BY: N THOLT 8/2025
CHECKED BY: N STYREN 8/2025

10538000SIUM001.DWG

MONTANA Department of Transportation

SIGNING PLANS

2/9/2026 3:59 PM

Docusign Envelope ID: A9A0746E-7614-8538-8284-8D9BDCE64452

AWARD COPY

SIGN LOCATION			PANEL SPECIFICATIONS						SIGN ASSEMBLY SPECIFICATIONS										SIGN ASSEMBLY QUANTITIES													ADDITIONAL INFORMATION	
									FEET			FEET							PANEL (SQ. FT.)		WOOD POLE (LNR. FT.)			STEEL POST (LBS.)					REMOVE		RESET			
STATION / R.P.	LFT / MDN / RGT / OH	ACTION	SIGN NO. (MUTCD / MT)	PANEL SIZE (INCHES) W X H	FY OR FYG	BACKBRACING REQ'D / 1 OR 2 ANGLE IRONS REQ'D	MOUNT BACK TO BACK / CHEVRON ANGLE MOUNT	CLEARANCE / OFFSET (SHOULDER TO EDGE OF SIGN)	TYPE OF SUPPORT	SUPPORT SPACING	MOUNTING HEIGHT	FOUNDATION DEPTH	SUPPORT LENGTH (ESTIMATED) X	Y	Z	CANTILEVER	BREAKAWAY TYPE	BEHIND GUARDRAIL	SHEET ALUMINUM	SHEET ALUMINUM INCREMENT	4" TOP DIA.	5" TOP DIA.	6" TOP DIA.	ROUND TUBULAR	SQUARE TUBULAR	STRUCTURAL STEEL	"U" POST	# OF BREAKAWAYS	SIGN	GUIDE	SIGN	GUIDE	SIGN IMAGE	REMARKS
154+80	L	NEW	M3-3P	21 X 15		BBR		10.0	2.25" 2.5" Tubular Stl-Square		5.0	3.0	11.7				★		2.2						93			1					SOUTH	
			M1-12 (203)	24 X 24		BBR													4.0														203	
			M5-3PL			BBR																												
			M3-1P			BBR																											NORTH	
			M1-12 (203)			BBR																											203	
			M6-2PR			BBR																												
155+90	L	REMOVE SIGN	M2-1P																										1				JCT	
			M1-12 (203)																														203	
155+90	L	REPLACE	W2-6	30 X 30				10.0	4" Treated Wood Pole		5.6	3.0	13.9						6.3		14								1					REMOVE old assembly at approx. 154+70, place new assembly at approx. 155+90
			W16-8P (Eastside)	42 X 8															2.3														Eastside Hwy	
US 93 (past end of project limits)																																		
A		REMOVE SIGN	W10-2R																										1					Railroad no longer present
			W10-5PR																															
B		REMOVE SIGN	W10-2L																										1					Railroad no longer present
			W10-5PL																															
																		PROJECT TOTALS	588.1	32.0	482	100	16		560		40	3	73	2				

SHEET NO.
S9

SIGN LOCATIONS AND SPECIFICATIONS

PROJECT NAME: FLORENCE - EAST
COUNTY: RAVALLI
PROJECT ID: STPS 203-1(28)10
UPN: 10538000

DESIGNED BY: L MOREY 7/2025
REVIEWED BY: N THOLT 8/2025
CHECKED BY: N STYREN 8/2025

MONTANA Department of Transportation

SIGNING PLANS

10538000SIUM001.DWG

2/9/2026 3:59 PM

Docusign Envelope ID: A9A0746E-7614-8538-8284-8D9BDCE64452

AWARD COPY

YELLOW PAINTED MEDIAN DETAIL

NO SCALE

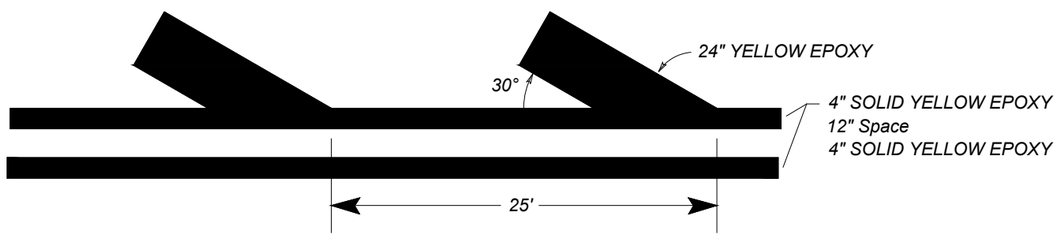

RURAL TWO WAY LEFT TURN TYPICAL PAVEMENT MARKINGS

NOT TO SCALE

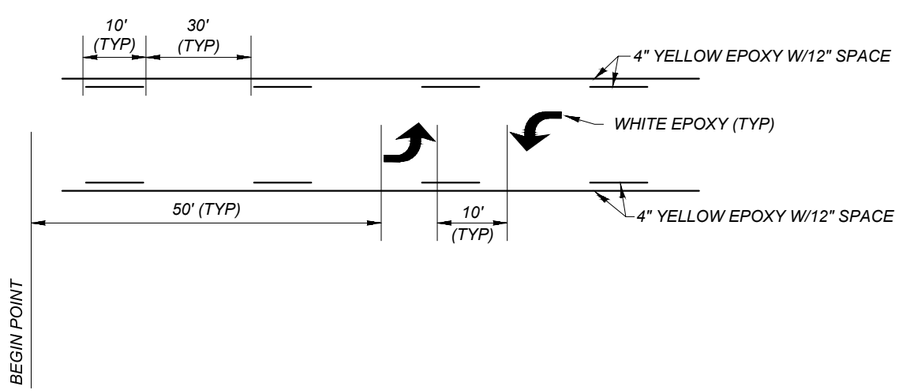

ROUNDABOUT YIELD LANE STRIPING DETAIL

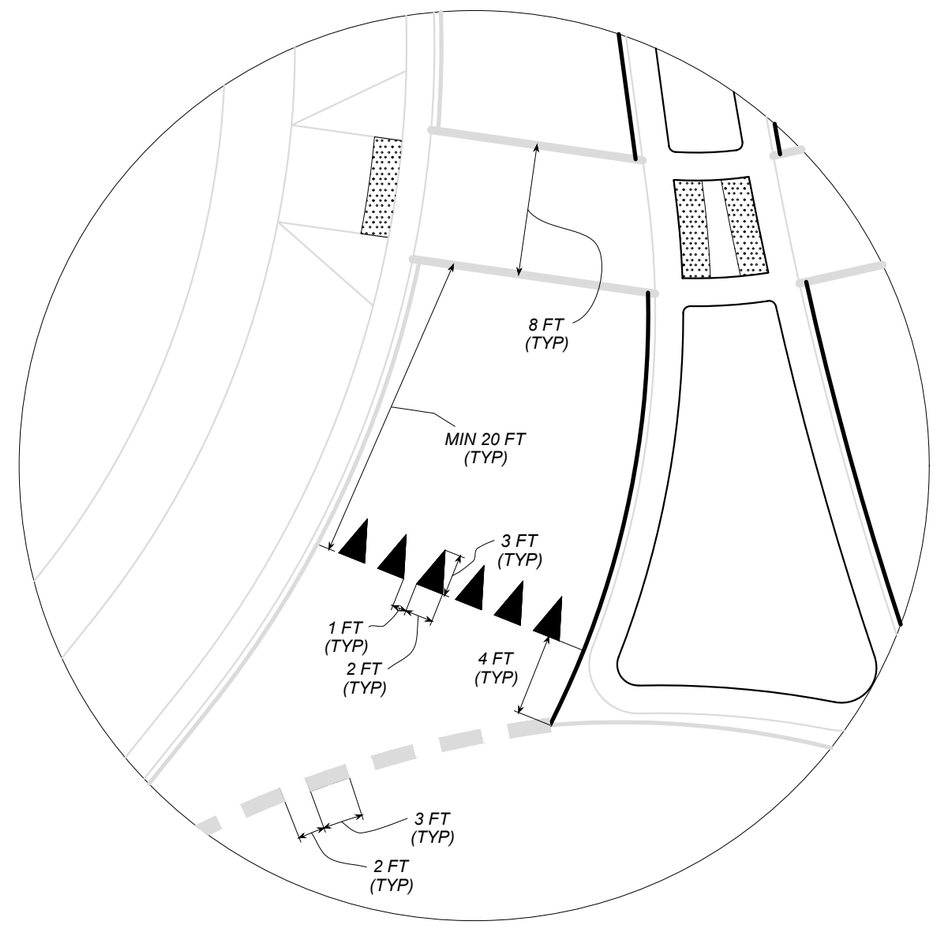

SHEET NO.
S10

PAVEMENT MARKING DETAILS

PROJECT NAME: FLORENCE - EAST
COUNTY: RAVALLI
PROJECT ID: STPS 203-1(28)10
UPN: 10538000

DESIGNED BY: L MOREY 7/2025
REVIEWED BY: N THOLT 8/2025
CHECKED BY: N STYREN 8/2025

MONTANA Department of Transportation

SIGNING PLANS

10538000SIGUM001.DWG

2/9/2026 3:59 PM

Docusign Envelope ID: A9A0746E-7614-8538-8284-8D9BDCE64452

AWARD COPY

PAVEMENT MARKINGS - ROUNDABOUT TRAFFIC ARROWS

NO SCALE

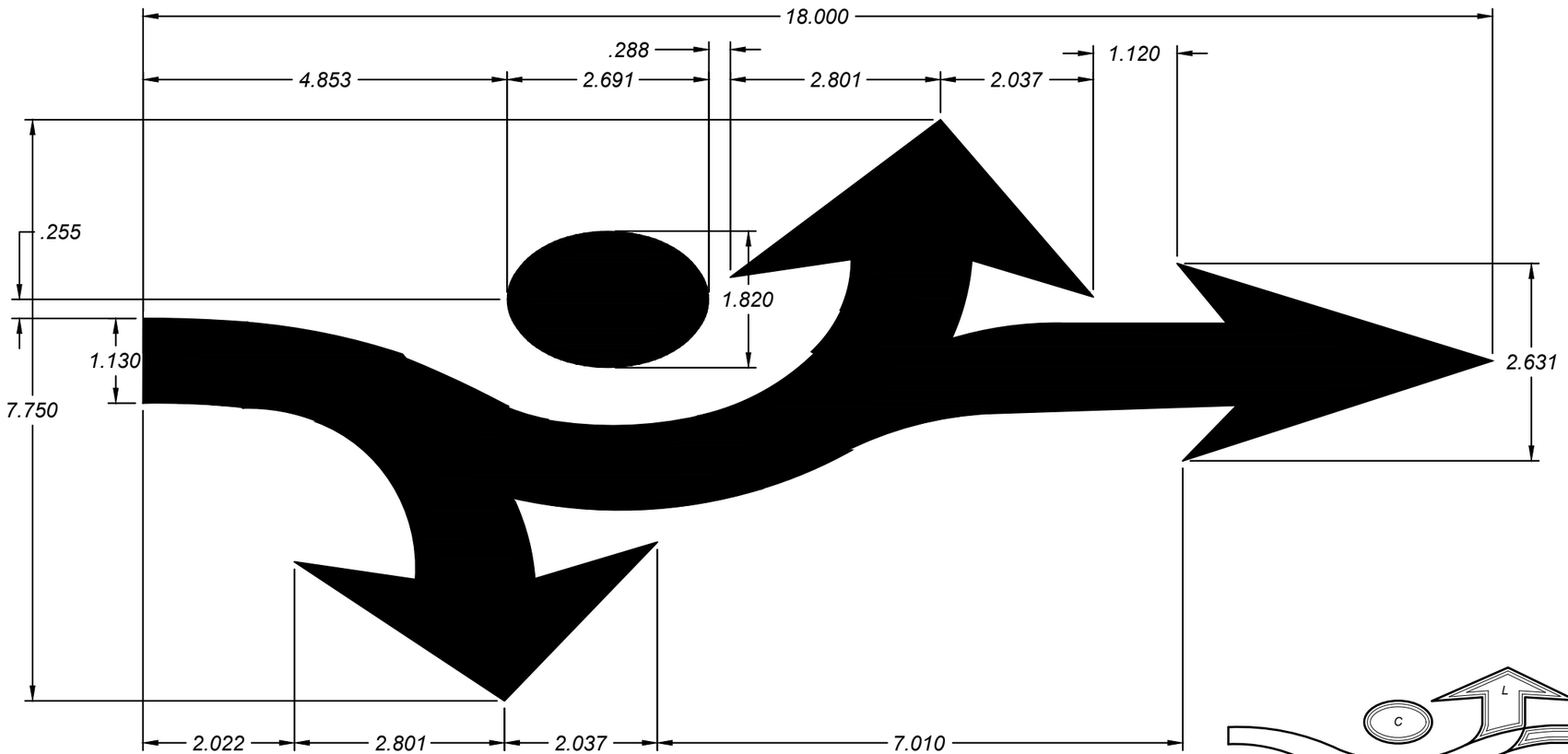

TYPE LC
18.07 FT²
PAINT 0.16 GAL./EA.
EPOXY 0.23 GAL./EA.

TYPE TC
18.56 FT²
PAINT 0.17 GAL./EA.
EPOXY 0.23 GAL./EA.

TYPE LTC
24.19 FT²
PAINT 0.22 GAL./EA.
EPOXY 0.30 GAL./EA.

TYPE TRC
23.07 FT²
PAINT 0.21 GAL./EA.
EPOXY 0.29 GAL./EA.

TYPE LTRC
28.70 FT²
PAINT 0.26 GAL./EA.
EPOXY 0.36 GAL./EA.

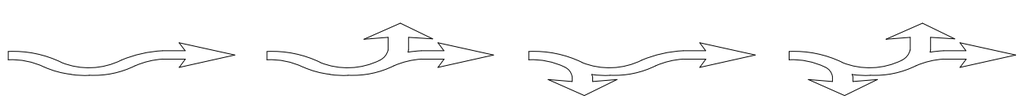

TYPE T
15.07 FT²
PAINT 0.14 GAL./EA.
EPOXY 0.19 GAL./EA.

TYPE LT
20.69 FT²
PAINT 0.19 GAL./EA.
EPOXY 0.26 GAL./EA.

TYPE TR
19.58 FT²
PAINT 0.18 GAL./EA.
EPOXY 0.24 GAL./EA.

TYPE LTR
20.69 FT²
PAINT 0.23 GAL./EA.
EPOXY 0.32 GAL./EA.

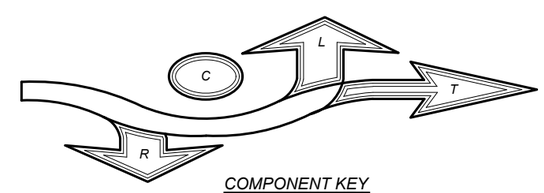

COMPONENT KEY

THE LABELED AREAS ABOVE CORRESPOND TO THE PORTIONS NEEDED FOR EACH TYPE OF ROUNDABOUT TRAFFIC ARROW. FOR EXAMPLE: THE ROUNDABOUT TRAFFIC ARROW TYPE TRC REQUIRES THE "T", "R", AND "C" AREAS. (THROUGH, RIGHT, CENTER)

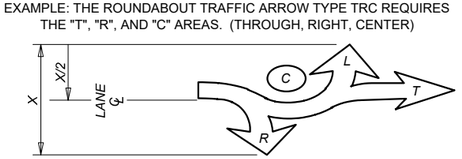

ROUNDABOUT TRAFFIC ARROW TYPE LTRC

PLACE THE FISH HOOK ARROW IN ADVANCE OF THE ROUNDABOUT CENTERED IN THE LANE IN WHICH IT IS TO BE PLACED

SHEET NO.
S11

PAVEMENT MARKING DETAIL

PROJECT NAME: FLORENCE - EAST
COUNTY: RAVALLI
PROJECT ID: STPS 203-1(28)10
UPN: 10538000

DESIGNED BY: L MOREY 7/2025
REVIEWED BY: N THOLT 8/2025
CHECKED BY: N STYREN 8/2025

MONTANA Department of Transportation

SIGNING PLANS

10538000SIUM001.DWG

2/9/2026 3:59 PM

Docusign Envelope ID: A9A0746E-7614-8538-8284-8D9BDCE64452

AWARD COPY

TYPICAL PAVEMENT MARKINGS
TWLTL / TURN LANE WORDS & SYMBOLS

NO SCALE

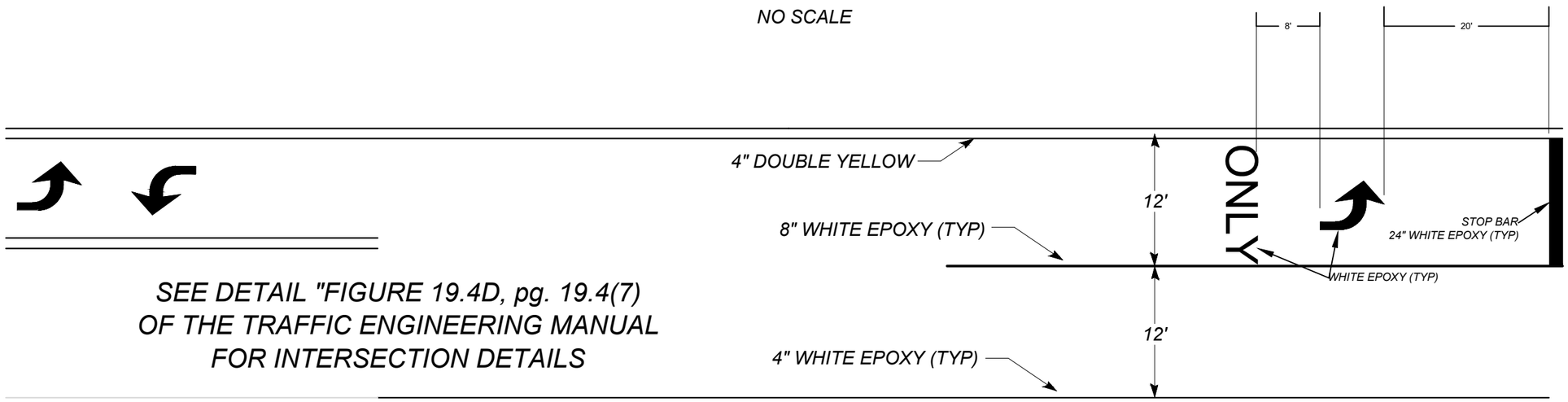

SEE DETAIL "FIGURE 19.4D, pg. 19.4(7)
OF THE TRAFFIC ENGINEERING MANUAL
FOR INTERSECTION DETAILS

SHEET NO.
S12

PAVEMENT MARKING DETAIL

PROJECT NAME: FLORENCE - EAST
COUNTY: RAVALLI
PROJECT ID: STPS 203-1(28)10
UPN: 10538000

DESIGNED BY: L MOREY 7/2025
REVIEWED BY: N THOLT 8/2025
CHECKED BY: N STYREN 8/2025

MONTANA Department of Transportation

SIGNING PLANS

2/9/2026 3:59 PM

10538000SIUM001.DWG

Docusign Envelope ID: A9A0746E-7614-8538-8284-8D9BDCE64452

AWARD COPY

TYPICAL CURB MARKINGS

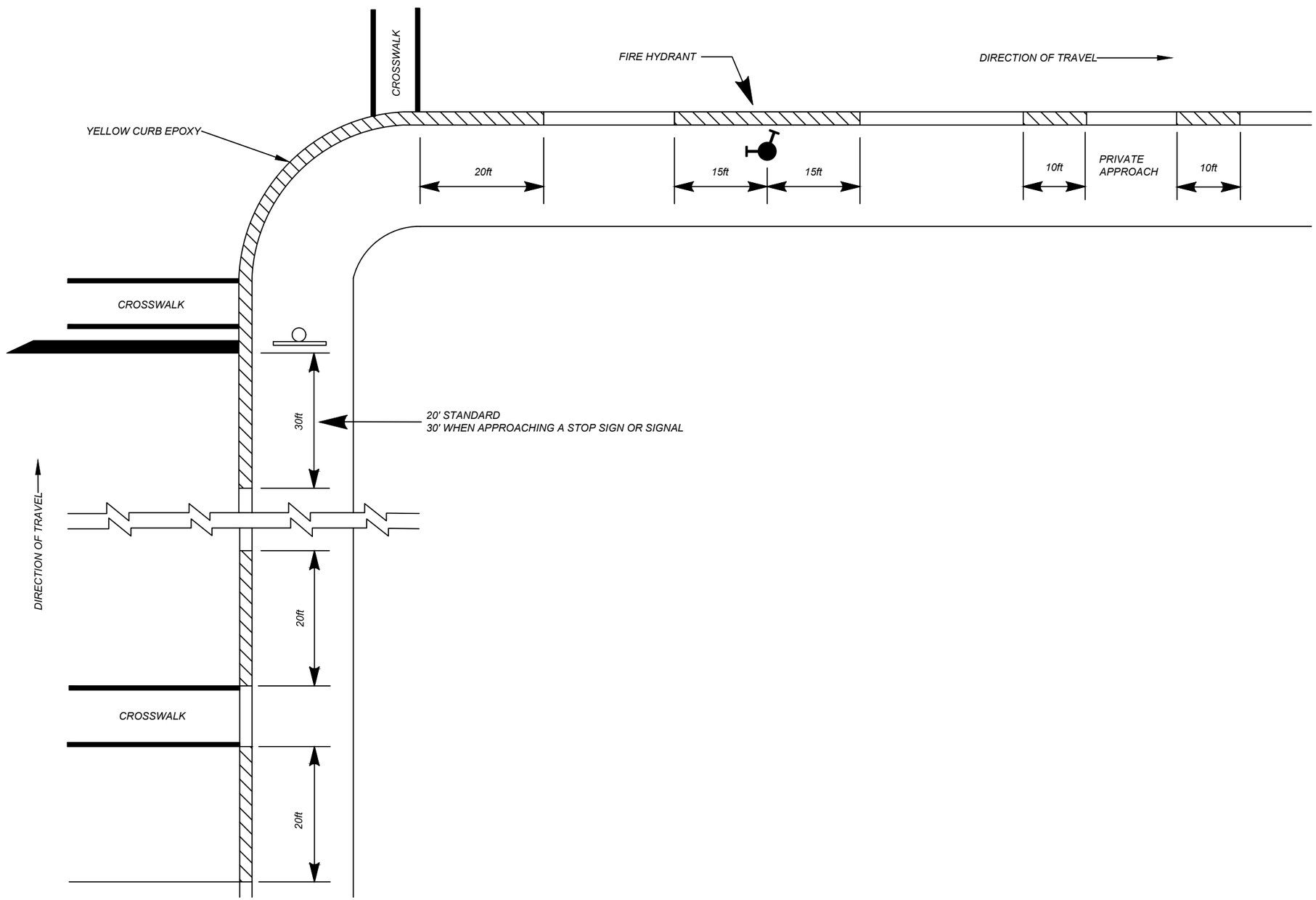

SHEET NO.
S13

PAVEMENT MARKING DETAIL

PROJECT NAME: FLORENCE - EAST
COUNTY: RAVALLI
PROJECT ID: STPS 203-1(28)10
UPN: 10538000

DESIGNED BY: L MOREY 7/2025
REVIEWED BY: N THOLT 8/2025
CHECKED BY: N STYREN 8/2025

MONTANA Department of Transportation

SIGNING PLANS

10538000SIGUM001.DWG

2/9/2026 3:59 PM

Docusign Envelope ID: A9A0746E-7614-8538-8284-8D9BDCE64452

AWARD COPY

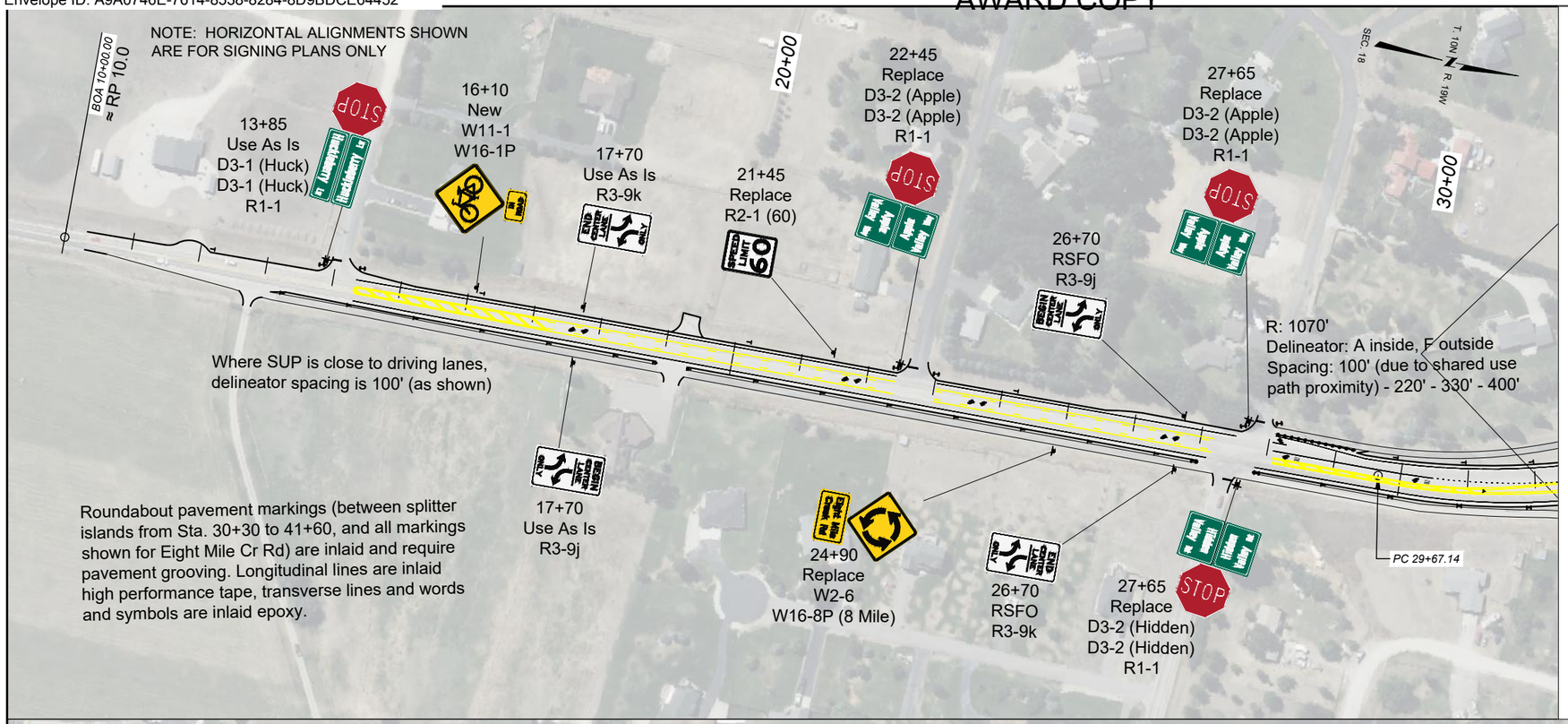

See next page (S15) for roundabout and Eight Mile Creek Rd signs, delineators, and pavement markings.

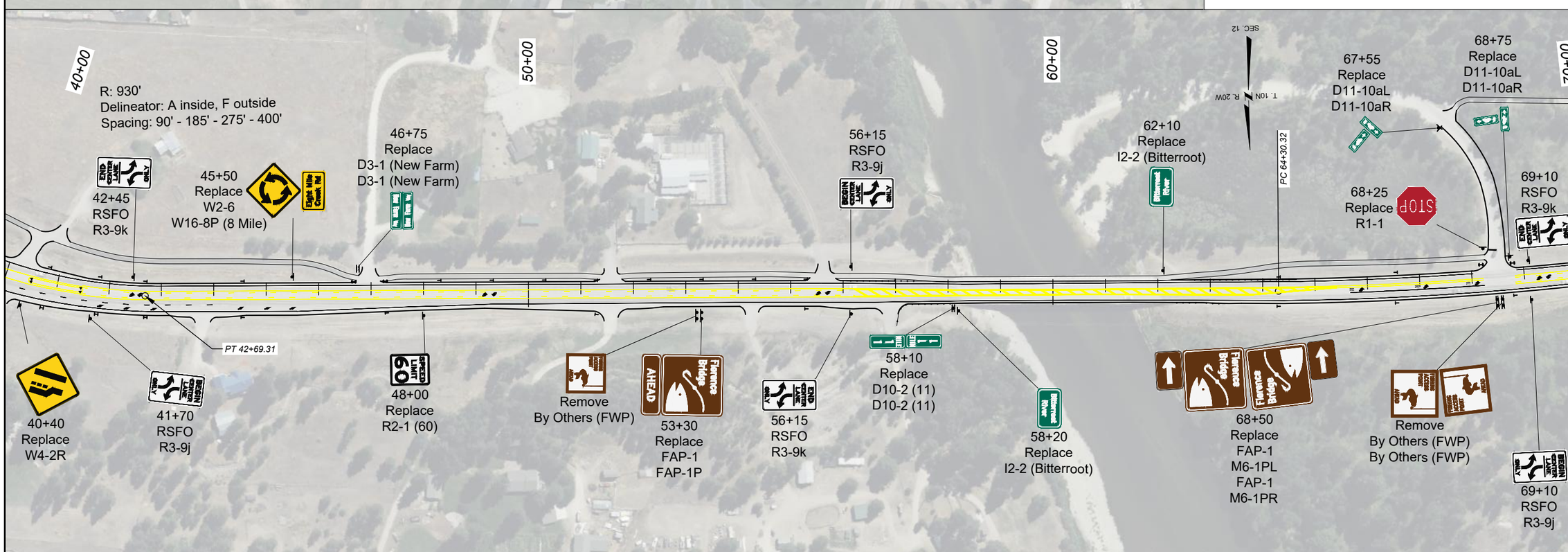

SHEET NO.
S14

PLAN SHEET

PROJECT NAME	FLORENCE - EAST
COUNTY	RAVALLI
PROJECT ID	STPS 203-1(28)10
UPN	10538000

DESIGNED BY	L MOREY	7/2025
REVIEWED BY	N THOLT	8/2025
CHECKED BY	N STYREN	8/2025

10538000SIPLN001.DWG

MONTANA Department of Transportation

SIGNING PLANS

2/9/2026 5:03 PM

Docusign Envelope ID: A9A0746E-7614-8538-8284-8D9BDCE64452

AWARD COPY

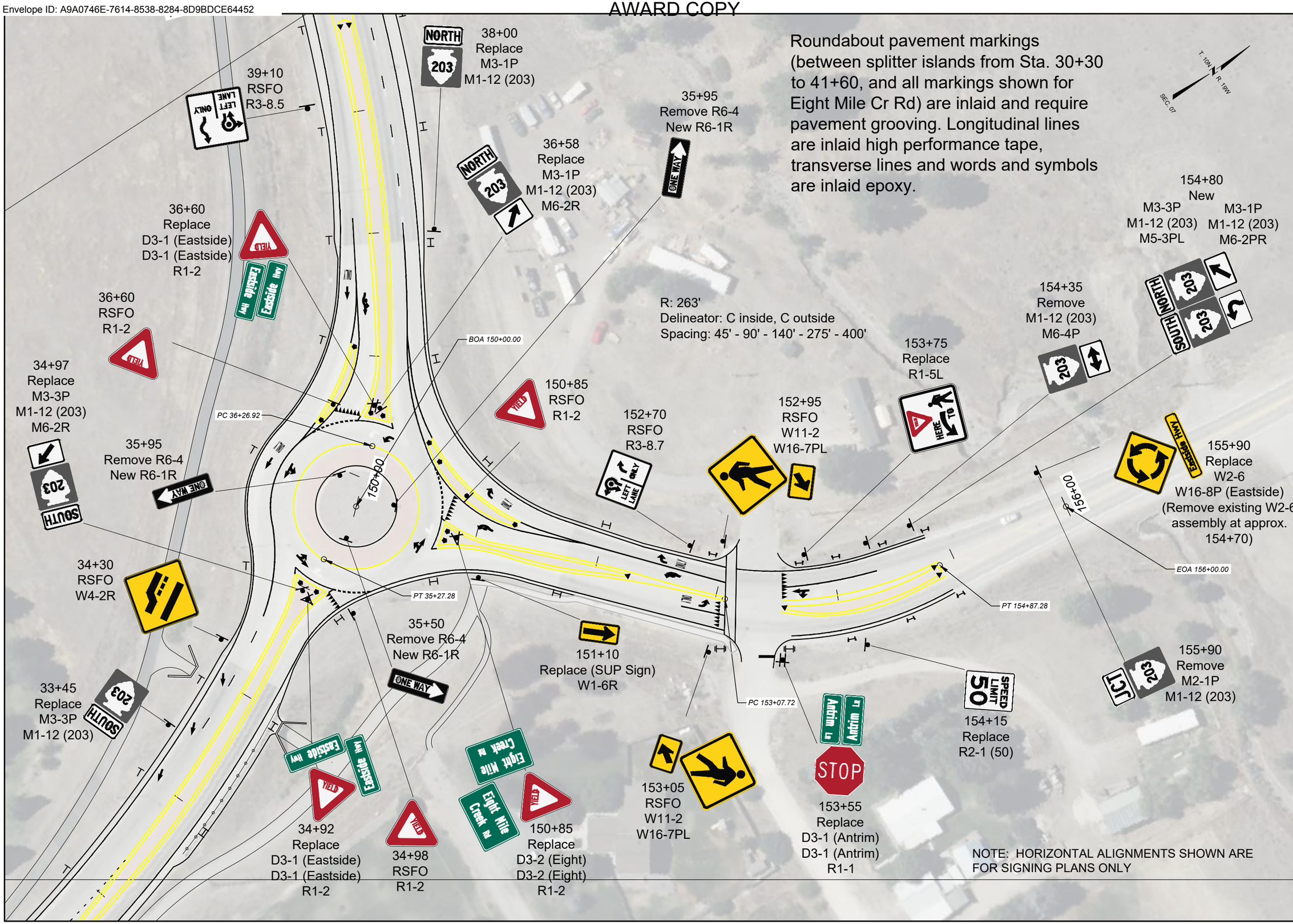

SHEET NO.
S15

PLAN SHEET

PROJECT NAME: FLORENCE - EAST
COUNTY: RAVALLI
PROJECT ID: STPS 203-1(28)10
UPN: 10538000

DESIGNED BY	REVIEWED BY	CHECKED BY
L MOREY 7/2025	N THOLT 8/2025	N STYREN 8/2025

MONTANA Department of Transportation

SIGNING PLANS

2/9/2026 5:03 PM

10538000SIPLN001.DWG

Docusign Envelope ID: A9A0746E-7614-8538-8284-8D9BDCE64452

AWARD COPY

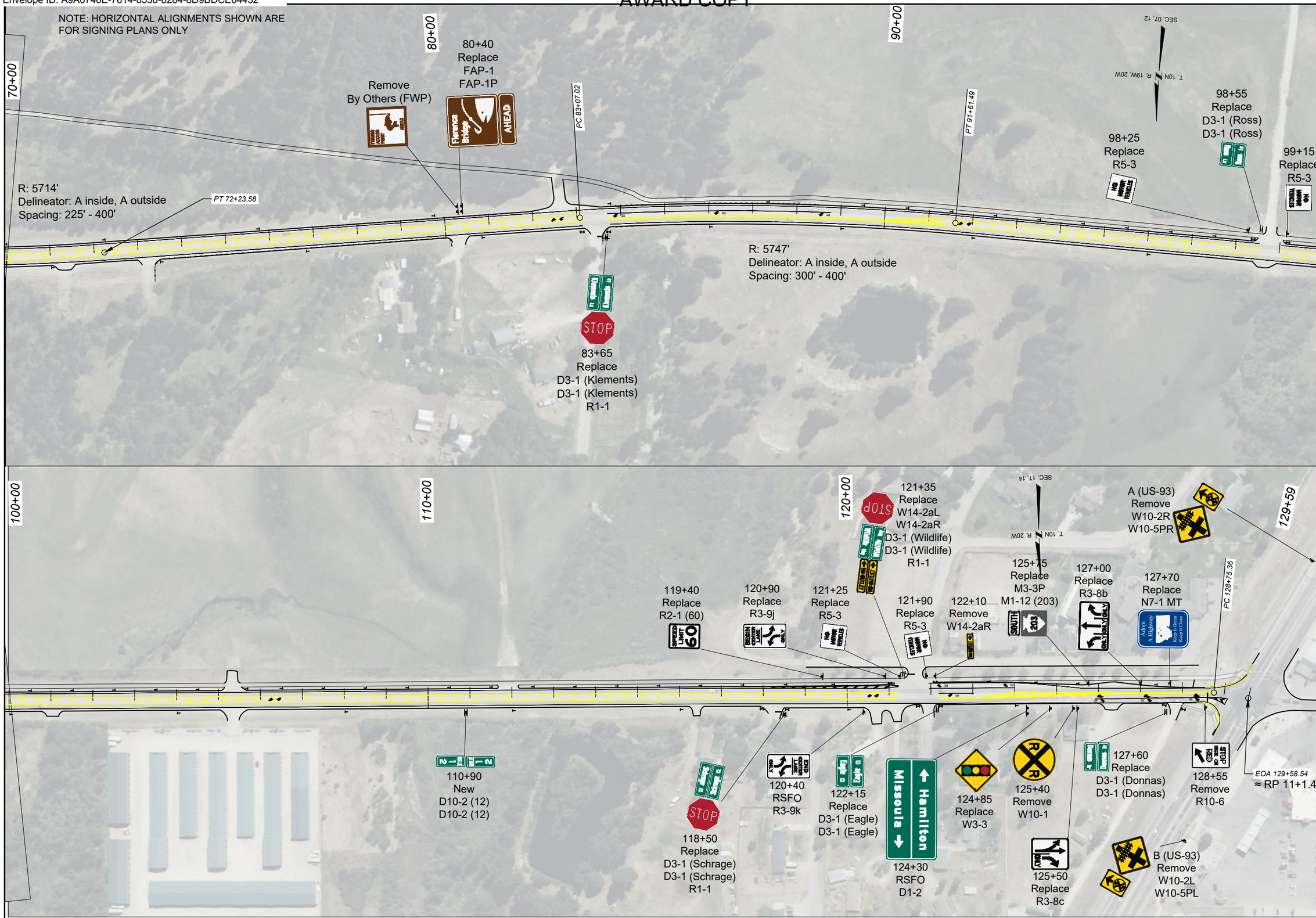

SHEET NO.
S16

PLAN SHEET

PROJECT NAME: FLORENCE - EAST
COUNTY: RAVALLI
PROJECT ID: STPS 203-1(28)10
UPN: 10538000

DESIGNED BY	L MOREY	7/2025
REVIEWED BY	N THOLT	8/2025
CHECKED BY	N STYREN	8/2025

10538000SIPLN001.DWG

MONTANA Department of Transportation

SIGNING PLANS

2/9/2026 5:03 PM

Docusign Envelope ID: A9A0746E-7614-8538-8284-8D9BDCE64452

AWARD COPY

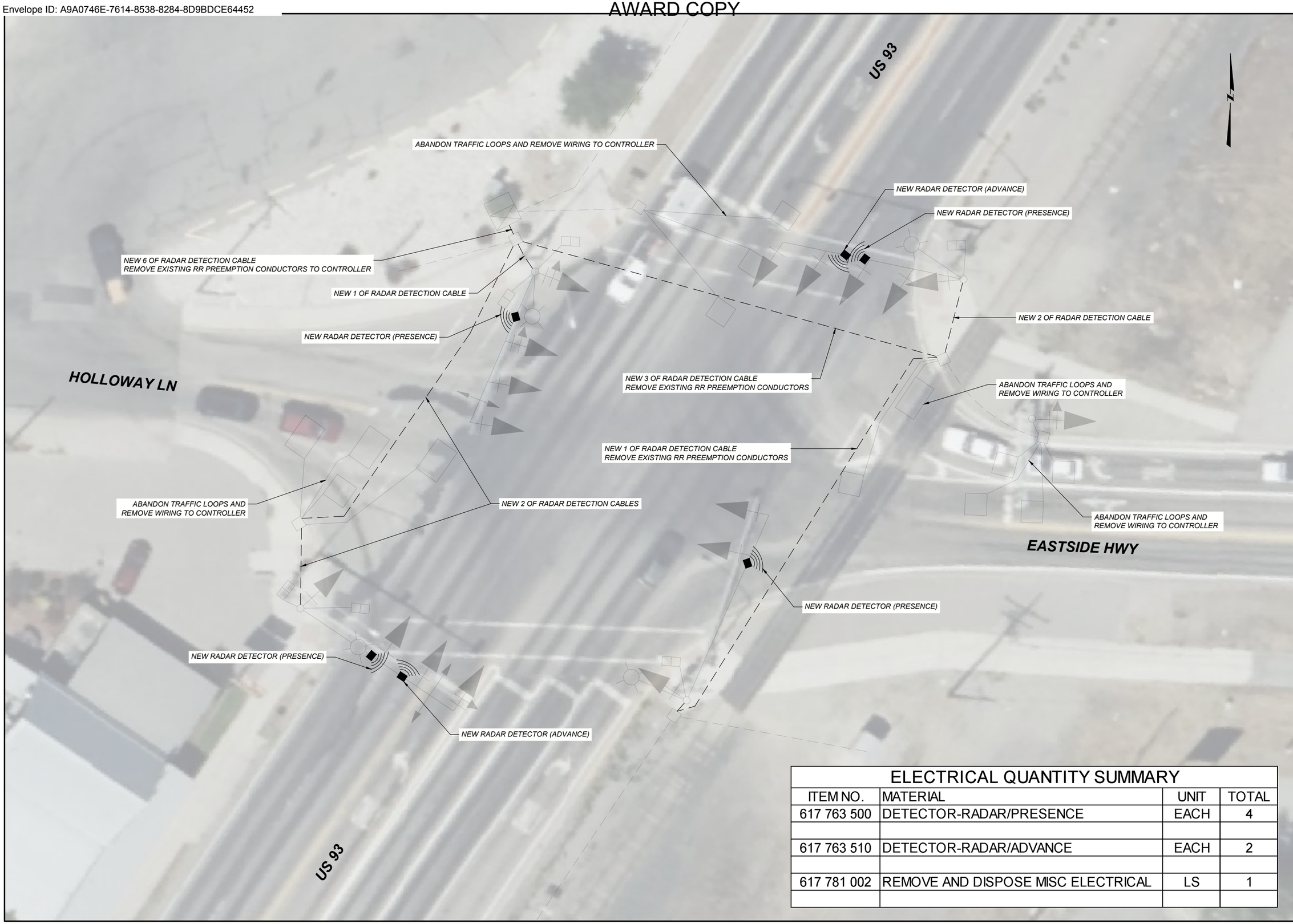

ELECTRICAL QUANTITY SUMMARY

ITEM NO.	MATERIAL	UNIT	TOTAL
617 763 500	DETECTOR-RADAR/PRESENCE	EACH	4
617 763 510	DETECTOR-RADAR/ADVANCE	EACH	2
617 781 002	REMOVE AND DISPOSE MISC ELECTRICAL	LS	1

SHEET NO.
E1

ELECTRICAL PLANS

PROJECT NAME: FLORENCE - EAST
COUNTY: RAVALLI
PROJECT ID: STPS 203-1(28)10
UPN: 10538000

DESIGNED BY: D. BLOCK 8/22/25
REVIEWED BY: D. CUNNINGHAM 8/22/25
CHECKED BY:

MONTANA Department of Transportation

ELECTRICAL PLANS

2/10/2026 10:14 AM

10538000ELMAP002.DWG

Docusign Envelope ID: A9A0746E-7614-8538-8284-8D9BDCE64452

AWARD COPY

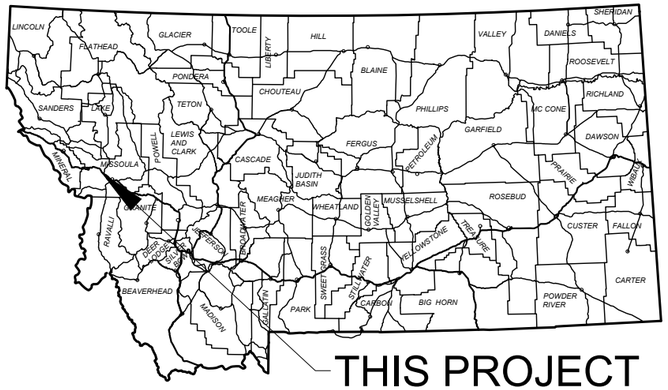

MONTANA DEPARTMENT OF TRANSPORTATION

FEDERAL AID PROJECT HSIP 32164(2)
CURVE WARNING WITH ILLUMINATION
SF 199 BECKWITH ST MSLA CNTY
MISSOULA COUNTY

LENGTH N/A

PROJECT DESIGN DATA

PRESENT	2023	A.D.T. =	620
LETTING	2024	A.D.T. =	630
DESIGN	2044	A.D.T. =	830
		D.H.V. =	130
		TRUCKS =	4.6%
		V. =	50 MPH
		18 KIP ESAL'S =	14 DAILY
		ANNUAL GROWTH RATE =	1.4%

ASSOCIATED PROJECT AGREEMENT NUMBERS	
R/W	
I.C.	
P.E.	HISP 32164(1)

RELATED PROJECTS
STPS 203-1(28)10

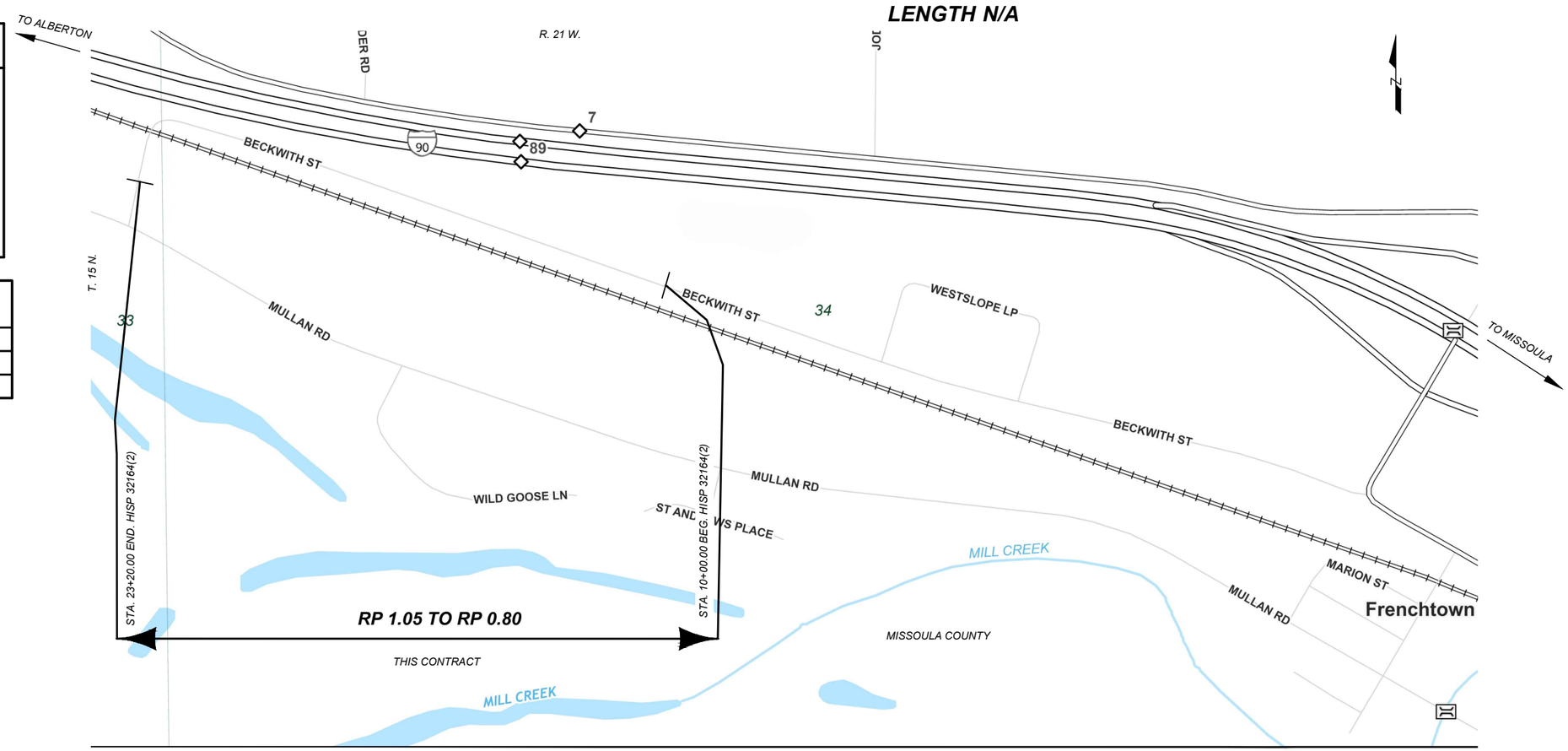

MONTANA
DEPARTMENT OF TRANSPORTATION

APPROVED BY:

TRAFFIC AND SAFETY ENGINEER

MONTANA GABE B. PRIEBE 13957PE LICENSED PROFESSIONAL ENGINEER

Signed by: Gabe B. Priebe

4895FFA73587466...

5/1/2026

DATE

SHEET NO. 1

TITLE SHEET

PROJECT NAME: SF 199 BECKWITH ST MSLA CNTY

COUNTY: MISSOULA

PROJECT ID: HSIP 32164(2)

UPN: 10353000

DESIGNED BY: BEN MOELLER 3/13/2025

REVIEWED BY: DANIEL CUNNINGHAM 12/10/2025

CHECKED BY:

10353000ELPRE001.DWG

MONTANA Department of Transportation

ELECTRICAL

2/19/2026 9:16 AM

Docusign Envelope ID: A9A0746E-7614-8538-8284-8D9BDCE64452

AWARD COPY

TABLE OF CONTENTS

	SHEET NO.
TITLE SHEET	1
TABLE OF CONTENTS	2
NOTES	2
SIGNING PLANS	
SUMMARY	S1
SPECIFICATIONS	S2
DETAILS	S3
PLANS	S4
ELECTRICAL PLANS	
SUMMARY	E01
DETAILS	E01 - E04
PLANS	E05
FENCE PLANS	E06

NOTES

UTILITIES

CALL THE UTILITIES UNDERGROUND LOCATION CENTER (811) OR OTHER NOTIFICATION SYSTEM FOR THE MARKING AND LOCATION OF ALL LINES AND SERVICES BEFORE EXCAVATING. ALL CLEARANCES OR DEPTHS PROVIDED FOR UTILITIES ARE FROM EXISTING GROUND LINE.

WETLANDS

WETLANDS MAY EXIST ADJACENT TO THE ROADWAY AND BEYOND THE PROJECT LIMITS. A WETLAND DELINEATION HAS NOT BEEN COMPLETED FOR THIS PROJECT. IMPACTS TO WETLAND AREAS ARE NOT ANTICIPATED IN ASSOCIATION WITH THE PROPOSED WORK. NO PERMITS HAVE BEEN OBTAINED. ANY ACTION IMPACTING WETLAND AREAS WITHOUT THE APPROPRIATE PERMITTING IS THE RESPONSIBILITY OF THE CONTRACTOR.

SHEET NO.
2

TABLE OF CONTENTS AND NOTES

PROJECT NAME: SF 199 BECKWITH ST MSLA CNTY
COUNTY: MISSOULA
PROJECT ID: HSIP 32164(2)
UPN: 10353000

DESIGNED BY: BEN MOELLER 3/13/2025
REVIEWED BY: DANIEL CUNNINGHAM 12/10/2025
CHECKED BY:

MONTANA Department of Transportation

ELECTRICAL

2/19/2026 9:16 AM 10353000ELPRE001.DWG

Docusign Envelope ID: A9A0746E-7614-8538-8284-8D9BDCE64452

AWARD COPY

NOTES AND ABBREVIATIONS:

MOUNTING HEIGHT REQUIREMENTS: MOUNTING HEIGHTS SHOWN REFER TO THE BOTTOM OF THE MAJOR PANEL. SEE DETAILED DRAWINGS 619-00 & 619-08

SEE LOCATION AND SPECIFICATION SHEETS FOR PORTIONS OF PROJECT NOT INCLUDED WITHIN SIGNING PLAN SHEETS.

SIGNING AND PAVEMENT MARKING LOCATIONS ARE APPROXIMATE. PROJECT MANAGER TO FIELD ADJUST AS NECESSARY.

HORIZONTAL ALIGNMENT: THE ALIGNMENT SHOWN IN THE PLANS IS NOT A RECREATION OF THE AS-BUILT ALIGNMENT AND DOES NOT SUPERSEDE THE EXISTING. THE INTENT OF THE SHOWN ALIGNMENT IS TO ASSIST IN LAYING OUT SIGNING ELEMENTS.

RSFO = REPLACE SIGN FACE ONLY

FY = FLUORESCENT YELLOW SHEETING REQUIRED

CAM = CHEVRON ANGLE MOUNT (SEE DET. DWG 619-24)

X = STANDARD BREAKAWAY DEVICE:
- FOR WOOD POST SEE DETAILED DRAWING 619-20.
- FOR STRUCTURAL STEEL SEE DETAILED DRAWING 619-13.

SUMMARY SIGNING & DELINEATION QUANTITIES

MATERIAL	TOTAL	UNIT
SIGNS-ALUM REFL SHEET XI	89.2	SQFT
REMOVE SIGN	6	EACH
POLES-TREATED WOOD 4 IN	2	EACH
POLES-TREATED WOOD 5 IN	3	EACH

PAVEMENT MARKINGS

ITEM	UNIT	FINAL APPLICA-TION	TOTAL
STRIPING - WHITE EPOXY	gallon	13	13
STRIPING - YELLOW EPOXY	gallon	13	13
WORDS & SYMBOLS - WHITE EPOXY	gallon	4	4

SHEET NO.
S1

SIGNING NOTES AND SUMMARY SHEET

PROJECT NAME: SF199 BECKWITH ST MSLA CNTY
COUNTY: MISSOULA COUNTY
PROJECT ID: HSIP 32164(2)
UPN: 10353000

DESIGNED BY: S. ERETH 08/2025
REVIEWED BY: N. THOLT 08/2025
CHECKED BY: N. STYREN 08/2025

MONTANA Department of Transportation

SIGNING PLANS

10353000SIUM001.DWG

2/12/2026 12:10 PM

Docusign Envelope ID: A9A0746E-7614-8538-8284-8D9BDCE64452

AWARD COPY

SIGN LOCATION			PANEL SPECIFICATIONS					SIGN ASSEMBLY SPECIFICATIONS											SIGN ASSEMBLY QUANTITIES													ADDITIONAL INFORMATION	
								FEET		FEET									PANEL (SQ. FT.)		WOOD POLE (LNR. FT.)	STEEL POST (LBS.)						REMOVE		RESET			
STATION / R.P.	LFT / MDN / RGT / OH	ACTION	SIGN NO. (MUTCD / MT)	PANEL SIZE (INCHES) W X H	FY OR FYG	BACKBRACING REQ'D / 1 OR 2 ANGLE IRONS REQ'D	MOUNT BACK TO BACK / CHEVRON ANGLE MOUNT	CLEARANCE / OFFSET (SHOULDER TO EDGE OF SIGN)	TYPE OF SUPPORT	SUPPORT SPACING	MOUNTING HEIGHT	FOUNDATION DEPTH	SUPPORT LENGTH (ESTIMATED) X	Y	Z	CANTILEVER	BREAKAWAY TYPE	BEHIND GUARDRAIL	SHEET ALUMINUM	SHEET ALUMINUM INCREMENT	4" TOP DIA.	5" TOP DIA.	ROUND TUBULAR	SQUARE TUBULAR	STRUCTURAL STEEL	"U" POST	# OF BREAKAWAYS	SIGN	GUIDE	SIGN	GUIDE	SIGN IMAGE	REMARKS
15+00	L	RSFO	R2-1	24 X 30															5.0									1				SPEED LIMIT 35	
17+00	R	RSFO	W1-1L	48 X 48	FY				* Mount on Flashing Beacon										16.0									1					* SEE ELECTRICAL PLANS FOR SUPPORT
		RSFO	W13-1P	24 X 24	FY														4.0													15 MPH	
18+00	R	REPLACE	W10-1	36 X 36	FY			10.0	4" Treated Wood Pole		5.0	3.0	12.9						7.1		14							1				R R	
18+46	R	NEW	W1-8 (2x)	24 X 30	FY		CAM	10.0	5" Treated Wood Pole		5.0	3.5	12.8				X		10.0			14											
18+86	R	NEW	W1-8 (2x)	24 X 30	FY		CAM	10.0	5" Treated Wood Pole		5.0	3.5	12.8				X		10.0			14											
19+09	R	REMOVE SIGN	W1-6L																									1					
19+24	R	NEW	W1-8 (2x)	24 X 30	FY		CAM	10.0	5" Treated Wood Pole		5.0	3.5	12.8				X		10.0			14											
21+25	L	REPLACE	W10-1	36 X 36	FY			10.0	4" Treated Wood Pole		5.0	3.0	12.9						7.1		14							1				R R	
22+10	L	RSFO	W1-1R	48 X 48	FY			10.0											16.0									1					
		RSFO	W13-1P	24 X 24	FY														4.0													15 MPH	
																		PROJECT TOTALS	89.2		28	42						6					

SHEET NO.
S2

SIGN LOCATIONS AND SPECIFICATIONS

PROJECT NAME: SF199 BECKWITH ST MSLA CNTY
COUNTY: MISSOULA COUNTY
PROJECT ID: HSIP 32164(2)
UPN: 10353000

DESIGNED BY: S. ERETH 08/2025
REVIEWED BY: N. THOLT 08/2025
CHECKED BY: N. STYREN 08/2025

MONTANA Department of Transportation

SIGNING PLANS

10353000SISUM001.DWG

2/12/2026 12:10 PM

Docusign Envelope ID: A9A0746E-7614-8538-8284-8D9BDCE64452

AWARD COPY

TYPICAL RURAL PAVEMENT MARKINGS

NO SCALE

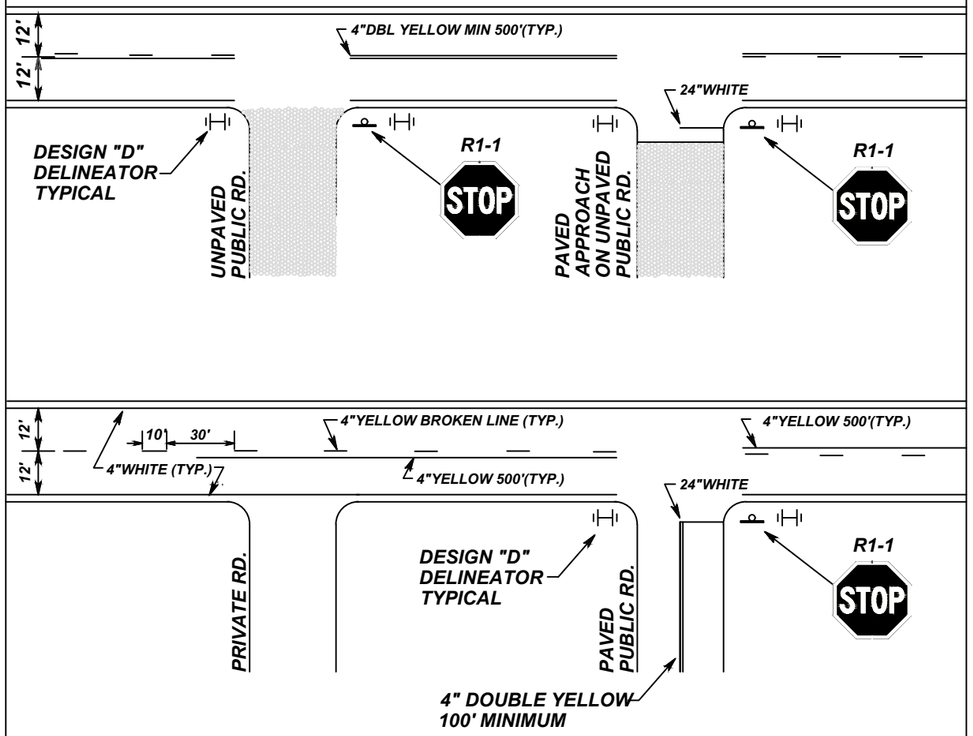

NOTE: FINAL CENTERLINE CONFIGURATION AND NO PASSING ZONES TO BE DETERMINED BY THE PROJECT MANAGER.

ALL PAVEMENT MARKINGS TO BE EPOXY UNLESS OTHERWISE SPECIFIED.

NOTES:

1. SEE CENTERLINE RUMBLE STRIPS DTL. DWG. NO. 411-05 FOR ADDITIONAL INFORMATION.
2. ALL PAVEMENT MARKINGS ARE TO CONFORM TO THE REQUIREMENTS OF THE "MANUAL ON UNIFORM TRAFFIC CONTROL DEVICES" AND "STANDARD HIGHWAY SIGNS" PUBLICATIONS, FROM THE FEDERAL HIGHWAY ADMINISTRATION.
3. SEE CENTERLINE PAVEMENT MARKINGS FOR RURAL HIGHWAYS MEMO DATED JUNE 18, 2019 FOR APPLICATION METHODOLOGY
4. DASHED LINES WILL HAVE A 10:30 SKIP IN RURAL LOCATIONS, AND A 9:15 SKIP IN URBAN LOCATIONS

TYPICAL CHEVRON PLACEMENT

NO SCALE

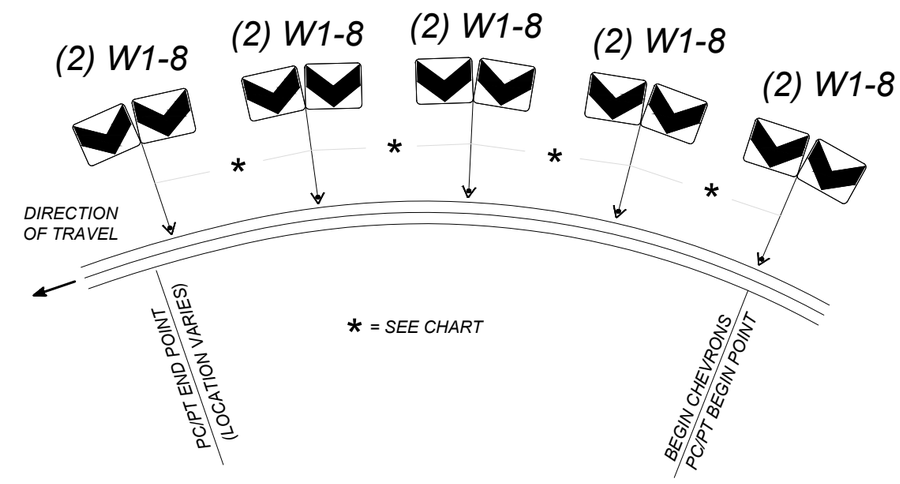

CURVE RADIUS	SIGN SPACING		R.P. CONVERSION
<200'	40'	=	.008±
200' - 400'	80'	=	.015±
401' - 700'	120'	=	.023±
701' - 1250'	160'	=	.030±
>1250'	200'	=	.038±

NOTES:

1. SEE SPECIFICATION SHEET FOR CHEVRON PLACEMENT.
2. USE BEGINNING OF CURVE LOCATION AS REFERENCE POINT TO INSTALL CHEVRONS ON OUTSIDE OF CURVE IN DIRECTION OF TRAVEL.

SHEET NO.
S3

SIGNING DETAIL SHEET

PROJECT NAME: SF199 BECKWITH ST MSLA CNTY
COUNTY: MISSOULA COUNTY
PROJECT ID: HSIP 32164(2)
UPN: 10353000

DESIGNED BY: S. ERETH 08/2025
REVIEWED BY: N. THOLT 08/2025
CHECKED BY: N. STYREN 08/2025
10353000SISUM001.DWG

MONTANA Department of Transportation

SIGNING PLANS

2/12/2026 12:10 PM

Docusign Envelope ID: A9A0746E-7614-8538-8284-8D9BDCE64452

AWARD COPY

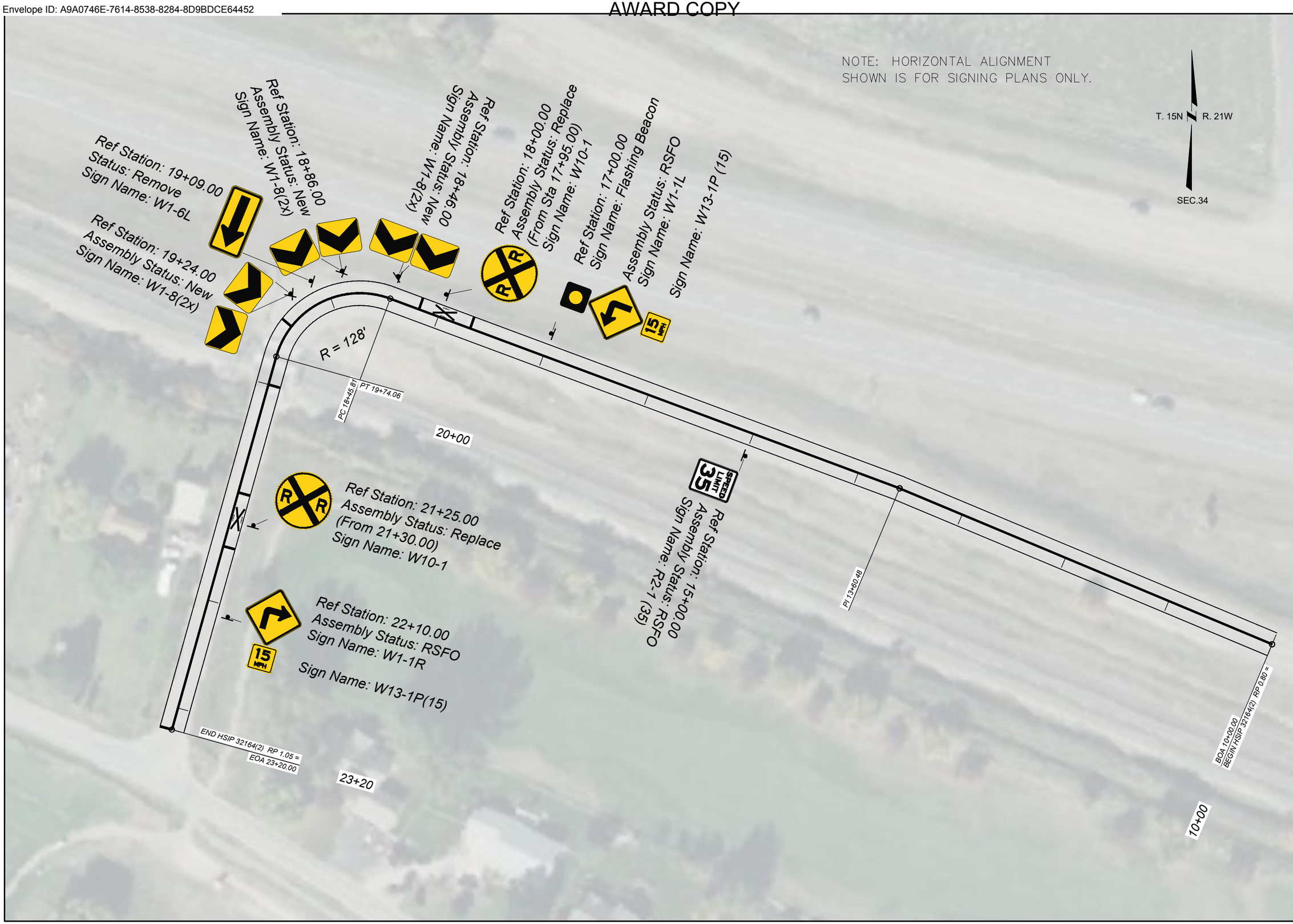

SHEET NO.
S4

SIGNING PLAN SHEET

PROJECT NAME: SF 199 BECKWITH ST MSLA CNTY
COUNTY: MISSOULA
PROJECT ID: HSIP 32164(2)
UPN: 10353000

DESIGNED BY		REVIEWED BY		CHECKED BY	
S. ERETH	08/2025	N. THOLT	08/2025	N. STYREN	08/2025

MONTANA Department of Transportation

SIGNING PLANS

SIGNING PLANS

2/12/2026 12:11 PM

Docusign Envelope ID: A9A0746E-7614-8538-8284-8D9BDCE64452

AWARD COPY

ELECTRICAL QUANTITY SUMMARY

ITEM NO.	MATERIAL	UNIT	TOTAL
616343920	CONDUIT-PLASTIC 2 IN	LNFT	198
616343924	CONDUIT-PLASTIC 2 1/2 IN	LNFT	207
616783007	PULL BOX-COMPOSITE TYPE 2	EACH	2
617000000	FOUNDATION-CONCRETE	CUYD	1
617033214	CABLE-COPPER 3AWG14-600V	LNFT	444
617123108	CONDUCTOR-COPPER AWG8-600V	LNFT	1316
617123110	CONDUCTOR-COPPER AWG10-600V	LNFT	405
617183056	STANDARD-STL TYPE 10-A-500-6	EACH	1
617303300	HIGH EFFICACY LUMINAIRE LED	EACH	1
617333100	SERV ASSEMBLY	EACH	1
617483110	SIG-TRAF 1 COL-1 WAY 12	EACH	1
617673200	SIG STANDARD TYPE 1-200	EACH	1

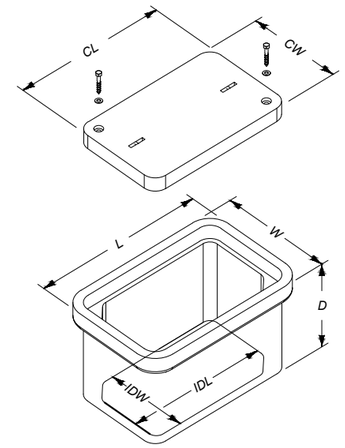

PULL BOX - COMPOSITE MINIMUM DIMENSIONS		
TYPE 1	TYPE 2	TYPE 3
L = 20"	L = 25"	L = 32"
W = 13"	W = 15"	W = 19"
D = 12"	D = 12"	D = 12"
I D L = 17"	I D L = 21"	I D L = 28"
I D W = 10"	I D W = 11"	I D W = 15"
C L = 18"	C L = 23"	C L = 30"
C W = 11"	C W = 13"	C W = 17"

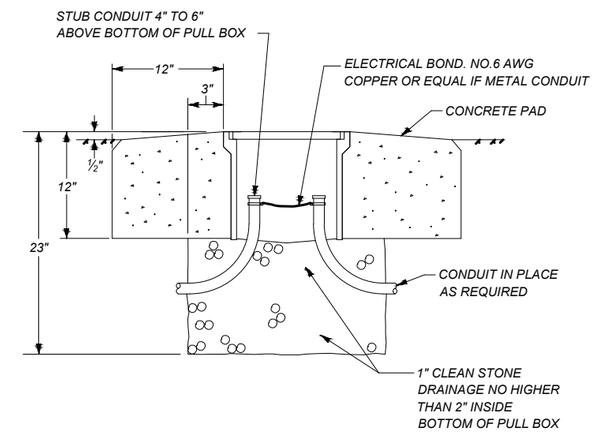

PULL BOX INSTALLED IN DIRT

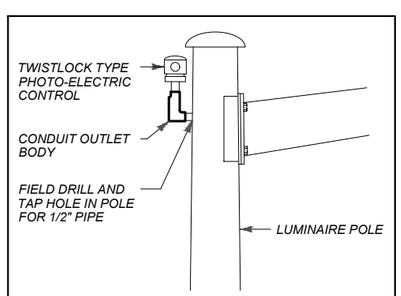

INSTALLATION DETAIL FOR PHOTO-ELECTRIC CONTROL

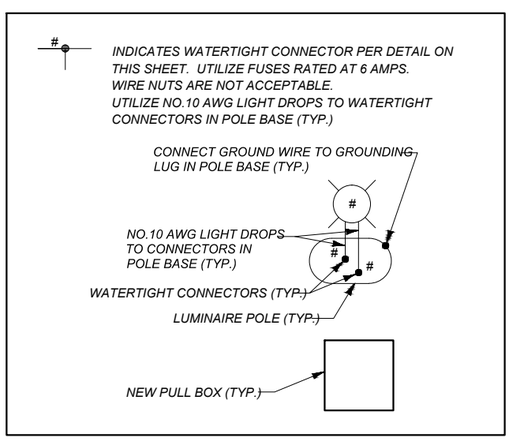

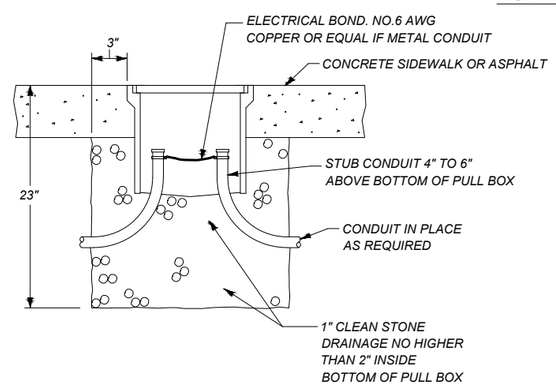

PULL BOX INSTALLED IN A SIDEWALK OR ASPHALT

PULL BOX-COMPOSITE

TYPE 1,2 & 3

NO SCALE

PB2

REVISED: 15-APR-2014

SHEET NO.
E01

ELECTRICAL DETAILS

PROJECT NAME: SF 199 BECKWITH ST MSLA CNTY
COUNTY: MISSOULA
PROJECT ID: HSIP 32164(2)
UPN: 10353000

DESIGNED BY: BEN MOELLER 3/13/2025
REVIEWED BY: DANIEL CUNNINGHAM 12/10/2025
CHECKED BY:

MONTANA Department of Transportation

ELECTRICAL

10353000ELPRE001.DWG

2/19/2026 9:21 AM

Docusign Envelope ID: A9A0746E-7614-8538-8284-8D9BDCE64452

AWARD COPY

WATERTIGHT CONNECTORS

TYPES 1, 6, 11 & 16

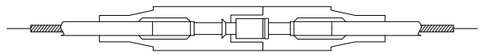

NON-FUSED BREAKAWAY

TYPES 2, 7, 12 & 17

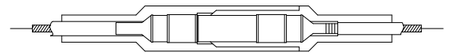

FUSED BREAKAWAY

IDENTITY NO.	DESCRIPTIVE SYMBOL & WIRE SIZES
1	8 — 8
2	8 — 10
3	8 / 8 — 10
4	8 / 8 — 8
5	8 / 8 — 8
6	6 — 6
7	6 — 10
8	6 / 6 — 10
9	6 / 6 — 6
10	6 / 6 — 6
11	4 — 4
12	4 — 10
13	4 / 4 — 10
14	4 / 4 — 4
15	4 / 4 — 4
16	10 — 10
17	10 — 10
18	10 / 10 — 10
19	10 / 10 — 10
20	10 / 10 — 10
21	VARIES / VARIES — VARIES

TYPES 3, 8, 13 & 18

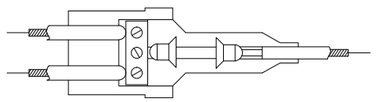

FUSED BREAKAWAY

TYPES 4, 9, 14 & 19

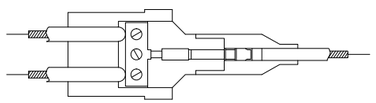

NON-FUSED BREAKAWAY

TYPES 5, 10, 15 & 20

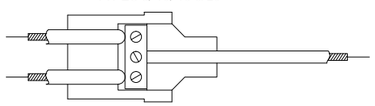

NON-FUSED NON-BREAKAWAY

TYPE 21

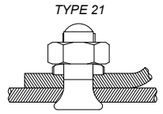

COPPER SPLIT BOLT - MAKE WATERTIGHT USING SELF ADHERING MASTIC

PROVIDE A PLUG AND RECEPTACLE HOUSED IN WATER-RESISTANT, SYNTHETIC RUBBER CAPABLE OF BURIAL IN THE GROUND OR INSTALLATION IN SUNLIGHT. THE HOUSING, CONSISTING OF 2 SECTIONS, PROVIDES A WATERTIGHT SEAL AROUND THE CABLE AND A WATERTIGHT SEAL BETWEEN THE TWO SECTIONS AT THE POINT OF DISCONNECTION. SUPPLY EACH KIT WITH SUFFICIENT SILICONE COMPOUND TO LUBRICATE METAL PARTS AND THE RUBBER HOUSINGS FOR EASY ASSEMBLY.

WHERE INDICATED, CRIMP A COPPER PIN AND A COPPER RECEPTACLE TO THE CABLE. THE RECEPTACLE IS TO ESTABLISH CONTACT PRESSURE WITH THE PIN THROUGH THE USE OF A COPPER BERYLLIUM SPRING AND BE EQUIPPED WITH A DISPOSABLE MOUNTING PIN. THE PIN IS TO BE CONSTRUCTED OF AT LEAST HALF-HARD MATERIAL. THE CRIMPING PORTION IS TO BE FULLY ANNEALED WHILE THE REST OF THE PIN IS MAINTAINED IN ITS ORIGINAL STATE OF HARDNESS. THE RECEPTACLE IS TO BE FULLY ANNEALED. THE PIN AND RECEPTACLE ARE TO LOCK TOGETHER SO THE CONNECTION IS MAINTAINED WHEN A MINIMUM FORCE OF 20 POUNDS TENSION IS APPLIED TO THE ATTACHED CABLES.

PROVIDE FUSED CONNECTOR KITS CONTAINING A PAIR OF SPRING LOADED 90% CONDUCTIVITY CONTACTS FOR GRIPPING A STANDARD MIDGET FERRULE TYPE FUSE. THE CONTACTS MUST BE FULLY ANNEALED AND ADAPTED TO BE CRIMPED TO THE CABLE.

WATERTIGHT CONNECTORS

NO SCALE

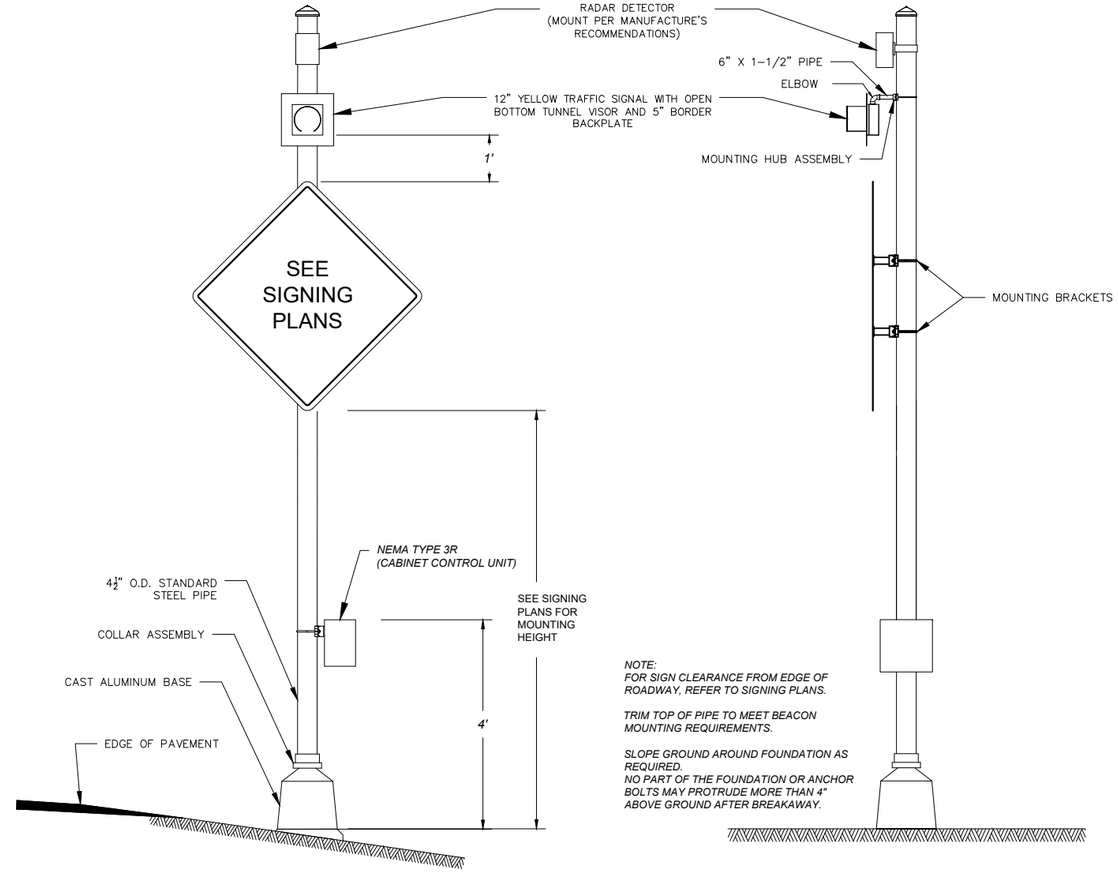

NOTE:
FOR SIGN CLEARANCE FROM EDGE OF ROADWAY, REFER TO SIGNING PLANS.

TRIM TOP OF PIPE TO MEET BEACON MOUNTING REQUIREMENTS.

SLOPE GROUND AROUND FOUNDATION AS REQUIRED.
NO PART OF THE FOUNDATION OR ANCHOR BOLTS MAY PROTRUDE MORE THAN 4" ABOVE GROUND AFTER BREAKAWAY.

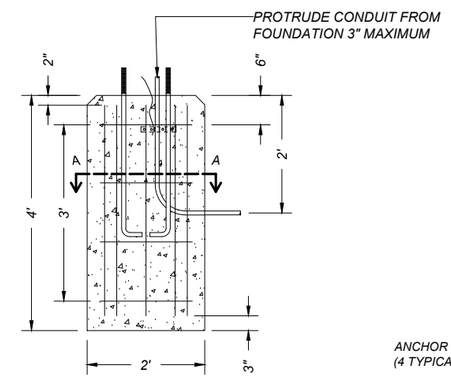

TYPE I-200

USE GRADE 60 REINFORCING STEEL

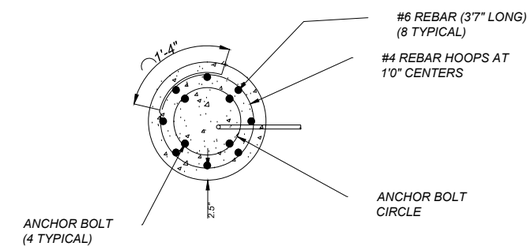

SECTION A-A

SHEET NO.
E02

ELECTRICAL DETAILS

PROJECT NAME: SF 199 BECKWITH ST MSLA CNTY
COUNTY: MISSOULA
PROJECT ID: HSIP 32164(2)
UPN: 10353000

DESIGNED BY: BEN MOELLER 3/13/2025
REVIEWED BY: DANIEL CUNNINGHAM 12/10/2025
CHECKED BY:

10353000ELPRE001.DWG

MONTANA Department of Transportation

ELECTRICAL

2/19/2026 9:16 AM

Docusign Envelope ID: A9A0746E-7614-8538-8284-8D9BDCE64452

AWARD COPY

WELDING INSPECTION:
INSPECT PER APPLICABLE MDT STANDARD SPECIFICATIONS.

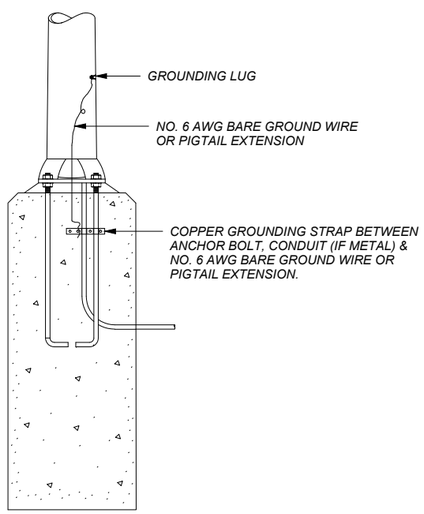

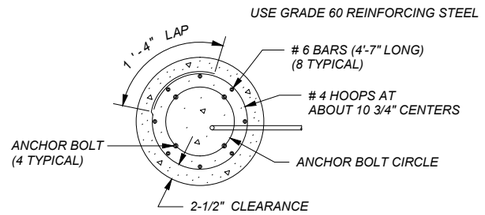

SECTION A-A

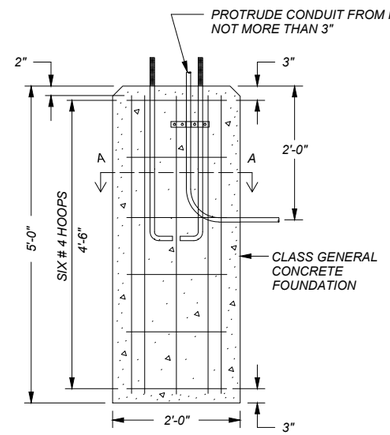

FACTORY INSTALLED CANISTER VIBRATION DAMPER TO BE INSTALLED INSIDE THE POLE TWO THIRDS POLE HEIGHT FROM THE BASE. PROVIDE MANUFACTURER'S PRODUCT DATA SHEET FOR MDT APPROVAL.

BASE PLATE REQUIREMENTS:
BASE PLATES TO BE 1" THICK AND MEET THE REQUIREMENTS OF AASHTO M270 GRADE 50. HOLES TO ACCEPT 1" DIA. ANCHOR BOLTS WITH A BOLT CIRCLE OF 13 1/2" FOR STANDARDS WITH 15 FT. ARMS AND A MOUNTING HEIGHT OF 40 FT. USE A BOLT CIRCLE OF 15" FOR STANDARDS WITH ARMS UP TO 25 FT. IN LENGTH AND MOUNTING HEIGHTS OF UP TO 45 FT.

TYPICAL OF ALL FOUNDATIONS

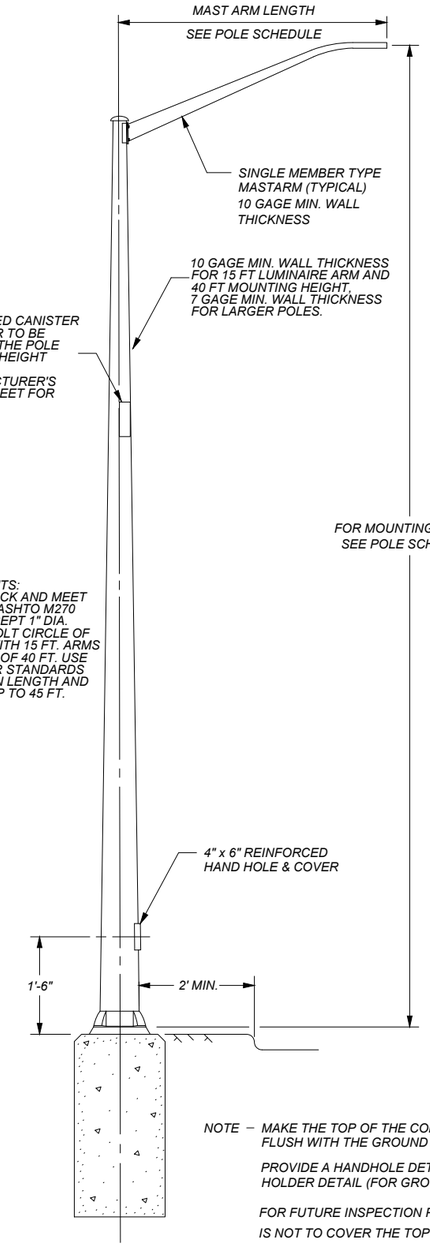

NOTE – MAKE THE TOP OF THE CONCRETE FOUNDATION FLUSH WITH THE GROUND LINE.

PROVIDE A HANDHOLE DETAIL AND A ½" NUT HOLDER DETAIL (FOR GROUNDING) .

FOR FUTURE INSPECTION PURPOSES, FILL MATERIAL IS NOT TO COVER THE TOP OF THE FOUNDATIONS

TYPE I0-A POLE

LUMINAIRE ARM CONNECTION REQUIRES 4 BOLT DESIGN WITH A325 BOLTS, NUTS AND WASHERS (FULLY TENSIONED)
TUBE TO PLATE CONNECTION TO BE SOCKET TYPE CONNECTION WITH TWO FILLET WELDS PER 14.4.4.6 OF THE SPECIFICATIONS.

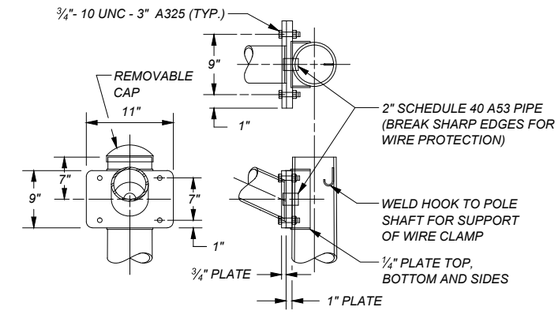

NOTE – FOR ARMS BETWEEN 16 FT. AND 25 FT. IN LENGTH, USE AN 11" SQUARE PLATE WITH A BOLT SPACING OF 9" VERTICAL AND 9" HORIZONTAL

DESIGN, FABRICATE, ERECT, AND INSPECT STANDARDS IN ACCORDANCE WITH THE CURRENT EDITION AASHTO LRFD SPECIFICATIONS FOR STRUCTURAL SUPPORTS FOR HIGHWAY SIGNS, LUMINAIRES AND TRAFFIC SIGNALS (AND ANY AMENDMENTS THERETO).

DESIGN PARAMETERS:

DESIGN WEIGHT = DEAD LOAD, ICE.

DESIGN AREA = AREA WITH MAXIMUM WIND LOAD (WIND IS PERPENDICULAR TO STANDARD, AS SHOWN).

DIRECTIONAL FACTOR Kd = 0.95, GUST FACTOR = 1.14 DRAG COEFFICIENTS LFRD TABLE 3.8.7-1

HEIGHT AND EXPOSURE FACTOR Kz
zg = TAKEN AS 900 FEET FOR EXPOSURE C
α= 9.5
z = 16 FEET

DESIGN WIND VELOCITY 700 YEAR MRI BASIC WIND SPEED (115 MPH)

TYPE 10-A LUMINAIRE STANDARDS, POLE BASES & FOUNDATION DETAILS

NO SCALE

CJP WELD WITH BACKER RING (TYP. ALL BASE CONNECTION) SEE DETAIL 4.4 IN TABLE 11.9.3.1-1

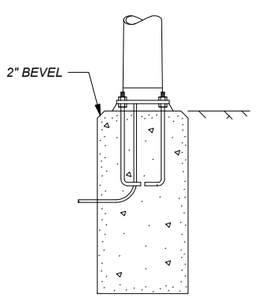

ANCHOR (DOUBLE NUT CONNECTION REQUIRED)

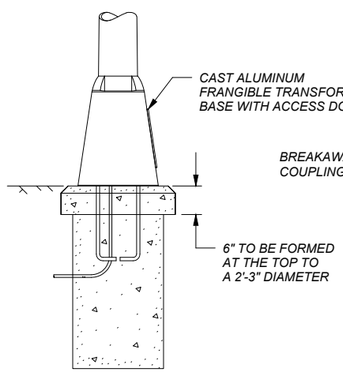

TRANSFORMER (BREAKAWAY TYPE)

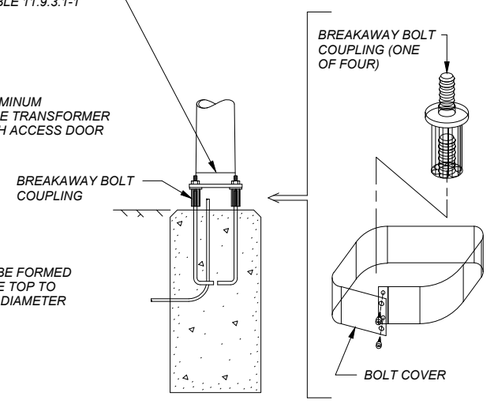

BOLT COUPLING (BREAKAWAY TYPE)

BASE TYPES FOR LUMINAIRE STANDARDS

NOTE – INSTALL AND PRETENSION ANCHOR BOLTS PER THE SPECIFICATIONS
MARK TOP OF ANCHOR BOLT WITH MATERIAL GRADE PER ASTM F 1554 S3

LS
REVISED 5-DEC-2023

SHEET NO.
E03

ELECTRICAL DETAILS

PROJECT NAME: SF 199 BECKWITH ST MSLA CNTY
COUNTY: MISSOULA
PROJECT ID: HSIP 32164(2)
UPN: 10353000

DESIGNED BY: BEN MOELLER 3/13/2025
REVIEWED BY: DANIEL CUNNINGHAM 12/10/2025
CHECKED BY:

10353000ELPRE001.DWG

MONTANA Department of Transportation
ELECTRICAL
2/19/2026 9:16 AM

Docusign Envelope ID: A9A0746E-7614-8538-8284-8D9BDCE64452

AWARD COPY

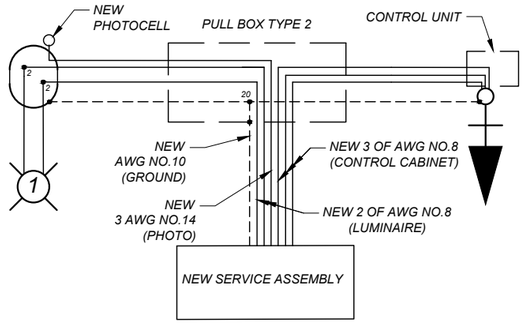

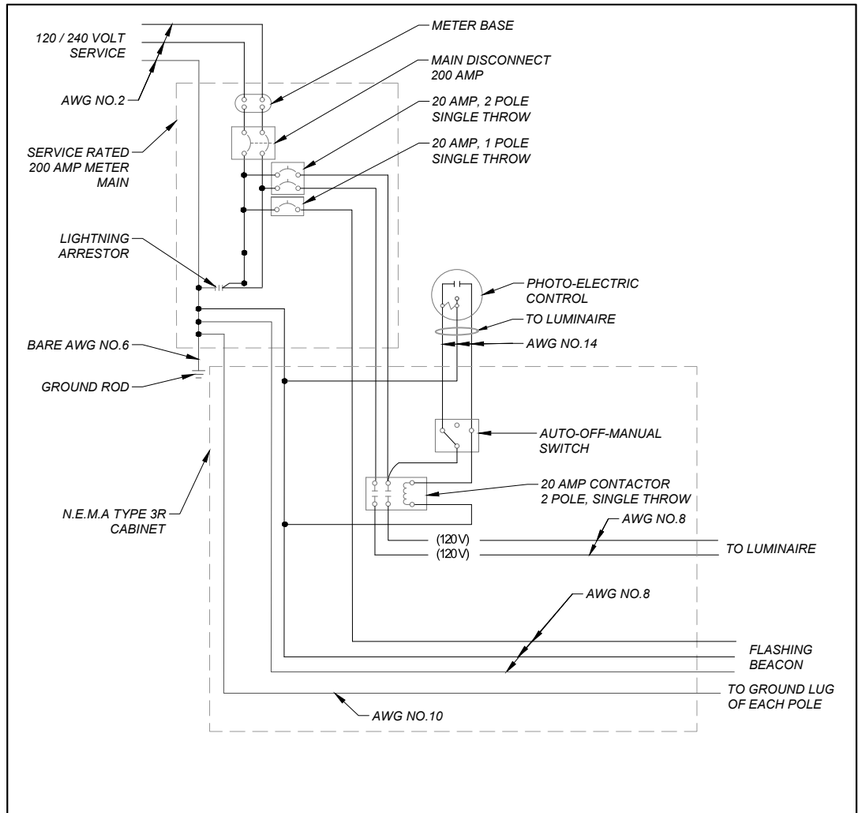

SERVICE WIRING DIAGRAM

DETAIL - CONTROL CABINET
(no scale)

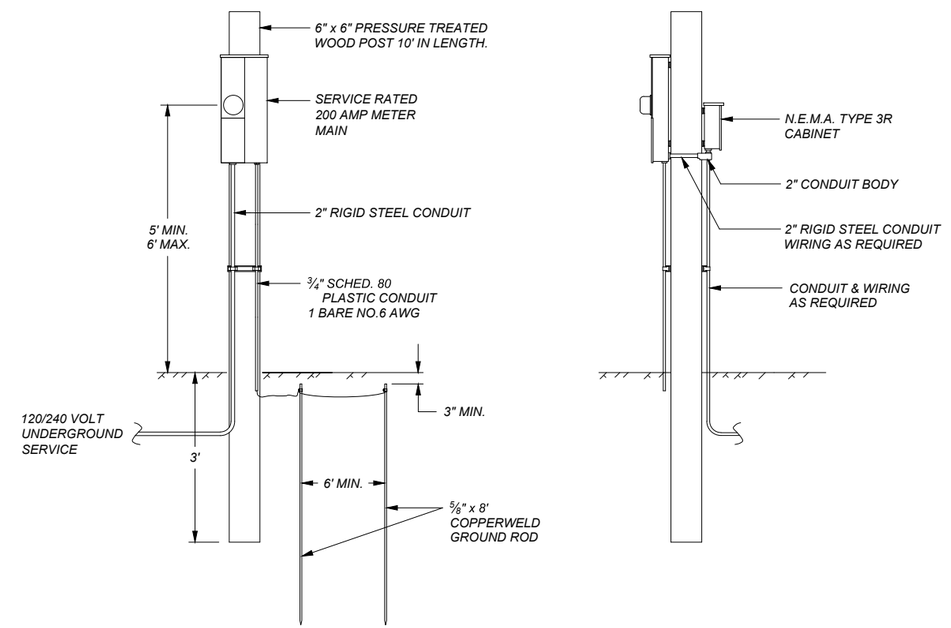

FRONT **SIDE**

UNDERGROUND SERVICE ASSEMBLY DETAIL

UNDERGROUND SERVICE
ASSEMBLY DETAIL
NO SCALE

SHEET NO.
E04

ELECTRICAL DETAILS

PROJECT NAME: SF 199 BECKWITH ST MSLA CNTY
COUNTY: MISSOULA
PROJECT ID: HSIP 32164(2)
UPN: 10353000

DESIGNED BY: BEN MOELLER 3/13/2025
REVIEWED BY: DANIEL CUNNINGHAM 12/10/2025
CHECKED BY:

MONTANA Department of Transportation
ELECTRICAL
2/19/2026 9:16 AM
10353000ELPRE001.DWG

Docusign Envelope ID: A9A0746E-7614-8538-8284-8D9BDCE64452

AWARD COPY

POLE SCHEDULE												
POINT #	DESCRIPTION	ITEM #	TYPE	TYPE POLE	FOUNDATION DIA X DEPTH	LUMINAIRE MASTARM	LUMINAIRE HEIGHT	LUMINAIRE TYPE	NORTHING	EASTING	LONGITUDE	LATITUDE
1	LUMINAIRE	617183056	10-A-500-6	BREAKAWAY	2' X 5'	15'	40'	LED	1045663.684	784838.1955	W114° 15' 04.23"	N047° 01' 11.13"
2	FLASHING BEACON	617673200	TYPE I-200	BREAKAWAY	2' X 4'				See Signing Plans for location			

NOTE: Minor adjustments of pole locations are allowed in the field.

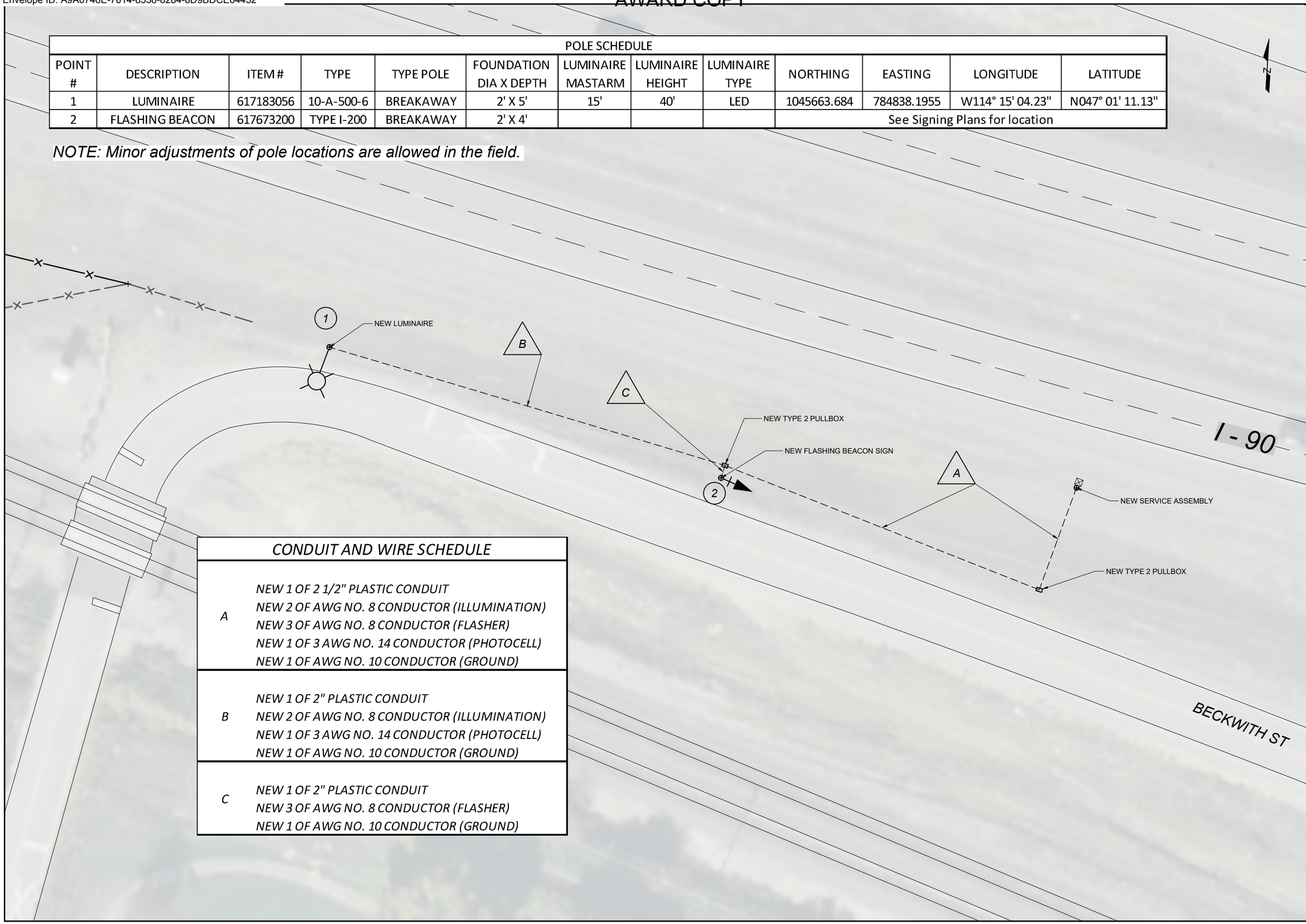

CONDUIT AND WIRE SCHEDULE	
A	NEW 1 OF 2 1/2" PLASTIC CONDUIT NEW 2 OF AWG NO. 8 CONDUCTOR (ILLUMINATION) NEW 3 OF AWG NO. 8 CONDUCTOR (FLASHER) NEW 1 OF 3 AWG NO. 14 CONDUCTOR (PHOTOCELL) NEW 1 OF AWG NO. 10 CONDUCTOR (GROUND)
B	NEW 1 OF 2" PLASTIC CONDUIT NEW 2 OF AWG NO. 8 CONDUCTOR (ILLUMINATION) NEW 1 OF 3 AWG NO. 14 CONDUCTOR (PHOTOCELL) NEW 1 OF AWG NO. 10 CONDUCTOR (GROUND)
C	NEW 1 OF 2" PLASTIC CONDUIT NEW 3 OF AWG NO. 8 CONDUCTOR (FLASHER) NEW 1 OF AWG NO. 10 CONDUCTOR (GROUND)

SHEET NO.
E05

ELECTRICAL PLANS

PROJECT NAME: SF 199 BECKWITH ST MSLA CNTY
COUNTY: MISSOULA
PROJECT ID: HSIP 32164(2)
UPN: 103530000

DESIGNED BY: BEN MOELLER 3/13/2025
REVIEWED BY: DANIEL CUNNINGHAM 12/10/2025
CHECKED BY:

MONTANA Department of Transportation
ELECTRICAL

2/19/2026 9:16 AM
10353000ELPRE001.DWG

Docusign Envelope ID: A9A0746E-7614-8538-8284-8D9BDCE64452

AWARD COPY

FENCE MATERIAL QUANTITIES			
ITEM NO.	MATERIAL	UNIT	TOTAL
607100149	FARM FENCE-TYPE F3W-32 IN WW	LNFT	230
607100380	FARM FENCE-PANEL/DOUBLE FW	EACH	2

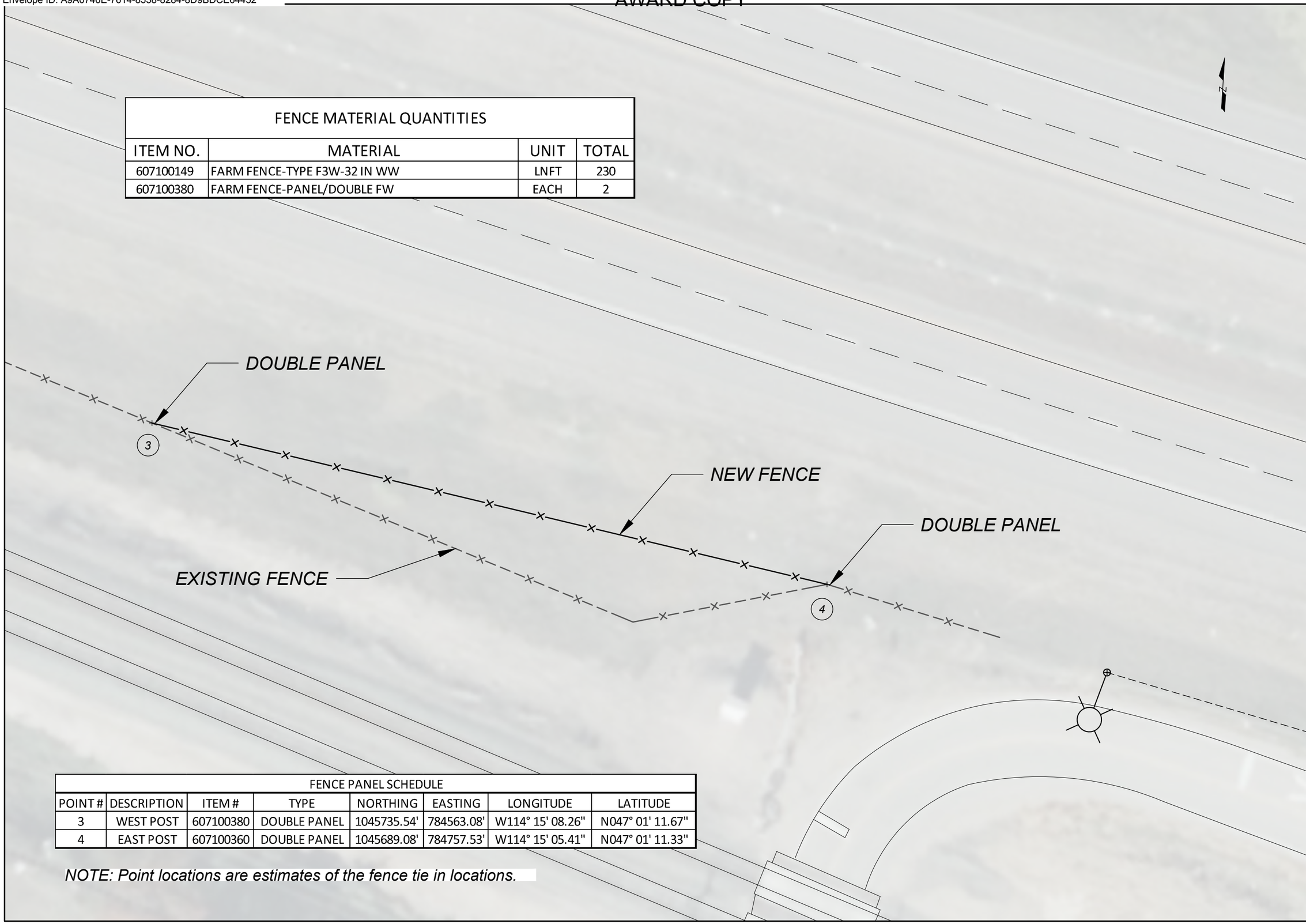

FENCE PANEL SCHEDULE							
POINT #	DESCRIPTION	ITEM #	TYPE	NORTHING	EASTING	LONGITUDE	LATITUDE
3	WEST POST	607100380	DOUBLE PANEL	1045735.54'	784563.08'	W114° 15' 08.26"	N047° 01' 11.67"
4	EAST POST	607100360	DOUBLE PANEL	1045689.08'	784757.53'	W114° 15' 05.41"	N047° 01' 11.33"

NOTE: Point locations are estimates of the fence tie in locations.

SHEET NO.
E06

FENCING PLANS

PROJECT NAME: SF 199 BECKWITH ST MSLA CNTY
COUNTY: MISSOULA
PROJECT ID: HSIP 32164(2)
UPN: 10353000

DESIGNED BY: BEN MOELLER 6/26/2025
REVIEWED BY: DANIEL CUNNINGHAM 12/10/2025
CHECKED BY:

MONTANA Department of Transportation

ELECTRICAL

10353000ELPRE001.DWG

2/19/2026 9:21 AM